MULTI CONCEPT 2B
TN/TW CHASSIS
(100 Hz, 4:3/16:9)

TV

2002

GB Service manual

D Service-Manual

universum

FT7120	Prod.-Nr. 867.510 0	TN71V3RUHBB
FT7121	Prod.-Nr. 528.112 6	TW82X6RUACM

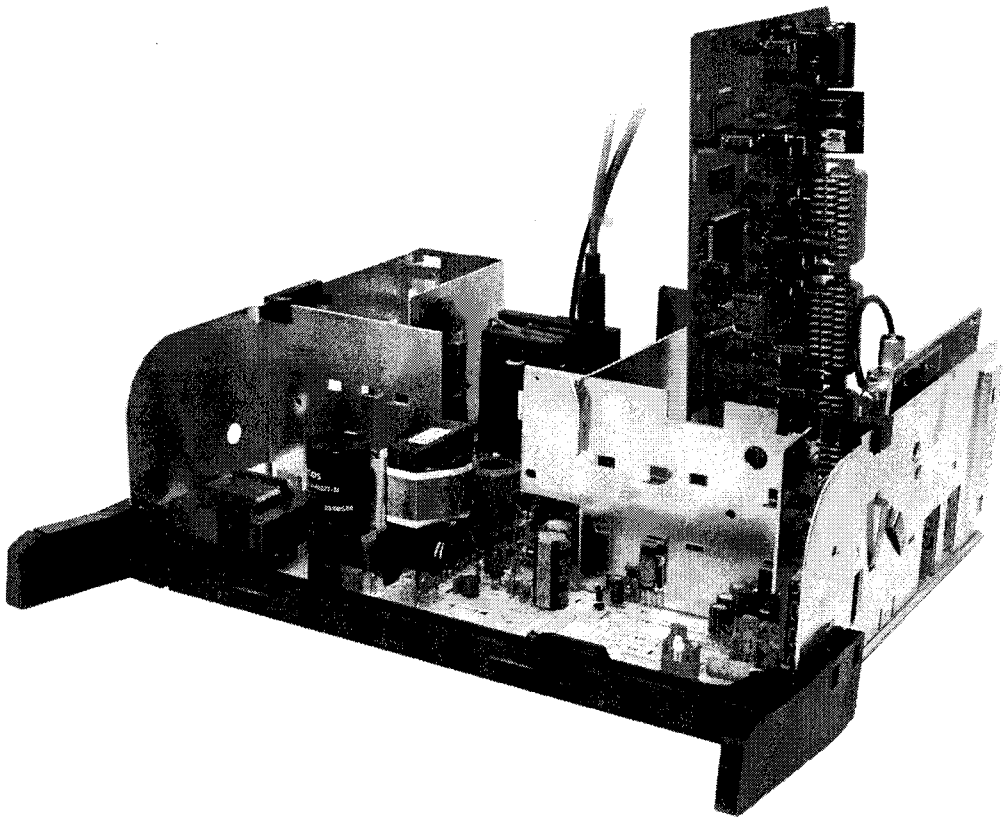

(GB) Contents

Repair instructions 1
Technical data 2
Block diagrams 3
SCART connector 7
Operating instructions 8
Initialization of NVRAM 8
Service adjustments 9
Schematic diagrams 18
Spare parts 27
Mechanical parts 41

(D) Inhaltsverzeichnis

Reparatur-Anweisung 1
Technische Daten 2
Blockschaltbilden 3
SCART Anschluß 7
Bedienungsanleitung 13
Initialisierung des NVRAM 13
Service-Einstellungen 14
Schaltpläne 18
Ersatzteileliste 27
Mechanische Bauteile 41

VIRTUAL DOLBY SURROUND

(GB) Manufactured under licence from Dolby Laboratories Licensing Corporation. "Dolby" and the double-D symbol are trademarks of Dolby Laboratories Licensing Corporation.

(D) Hergestellt unter Lizenz der Dolby Laboratories Licensing Corporation. "Dolby" und das Symbol Doppel-D sind Warenzeichen der Dolby Laboratories Licensing Corporation.

Profectis
Technischer Kundendienst

Copyright © 2002 by Quelle. All Rights Reserved.

(GB) Repair instructions

Service and repair work must be performed only in accordance with the existing safety regulations!

Where a high current or a mechanical stress exists solder connections have been strengthened by using eyelets. Such a connection must not be left without an eyelet. Wiring has an effect on safety and EMC (Electro-Magnetic Compatibility). Therefore wires must be maintained in their original positions.

X-RAY REGULATIONS:
The picture tube type and the maximum permissible high-voltage ensure that the X-ray intensity of the receiver remains far below the permissible value. The high-voltage must not exceed the value mentioned on the type label. The high voltage is within the permissible limits when the operating voltage (U1) of the horizontal deflection stage is accurate. Refer to the section "Service adjustments".

ESD Warning
The receiver contains components that are sensitive to electrostatic discharge (ESD). Any servicing or repair work must be done in an environment where the components will not be subjected to ESD. Use a special grounding device!

Surface-Mounted Device (SMD)
SMD's are glued and soldered. In order not to damage the P.C.B e.g. when replacing ICs and similar components with many soldering points, special tools are required when servicing SMD's.

Changes
The manufacturer reserves the right to change the design and specification without prior notice.

(D) Reparatur-Anweisung

Service- und Reparaturarbeiten dürfen nur in Übereinstimmung mit den gültigen Sicherheitsbestimmungen durchgeführt werden!

Bei bestehendem hohen Stromwerten oder mechanischer Beanspruchung müssen Lötverbindungen durch Ösen verstärkt werden. Eine derartige Verbindung darf nicht ohne Öse ausgeführt werden.

Die Verdrahtung hat Einfluß auf die Sicherheit und die elektromagnetische Verträglichkeit. Daher muß die ursprüngliche Anordnung der Verdrahtung erhalten bleiben.

RÖNTGENVERORDNUNG
Der Bildröhrentyp und die maximal zulässige Hochspannung stellen sicher, daß die Intensität der Röntgenstrahlen des Fernsehgerätes weit unter dem zulässigen Wert bleibt. Die Hochspannung darf nicht den auf dem Typenschild befindlichen Wert überschreiten. Die Hochspannung liegt im zulässigen Bereich, wenn die Betriebsspannung (U1) der Horizontal-Ablenkstufe genau eingehalten wird. Siehe auch Abschnitt "Service-Einstellungen".

EGB-Warnung
Das Fernsehgerät enthält Bauteile, die empfindlich auf elektrostatische Entladung reagieren. Alle Service- oder Reparaturarbeiten sind in einer Umgebung durchzuführen, in der die Bauteile nicht elektrostatischer Entladung ausgesetzt sind. Verwenden Sie eine spezielle Erdungsvorrichtung!

SMD-Bauelement
Die SMD's sind geklebt und verlötet. Es sind spezielle Werkzeuge erforderlich, damit bei Austausch von ICs und ähnlichen Bauteilen mit vielen Lötpunkten die Leiterplatte nicht beschädigt wird.

Änderungen
Der Hersteller behält sich das Recht vor, Änderungen in Bauart und Ausführung ohne vorherige Ankündigung durchzuführen.

Technical data	Technische Daten	
System Multinorm NTSC	**Norm** Multinorm NTSC	 PAL/SECAM B, G, D, K, K1, L, L', I 3.58 MHz via scart 4.43 MHz via RF / scart
Mains power Consumption [2] In stand-by	**Netzanschluß** Leistungsaufnahme [2] In Bereitschaft	 195...264 V, 50 Hz 130 W (normal) < 1 W
Frequency range	**Frequenzbereich**	48.25...855.25 MHz
Sound output (RMS) Subwoofer [1]	**Tonendstufe (RMS)** Subwoofer [1]	2 x 10 W/8 Ω 14 W/8 Ω
Connections on the front panel Headphones Audio/Video	**Anschlüsse an der Vorderseite** Kopfhöreranschluß Audio/Video	 32...600 Ω, 3.5 mm Audio in: 0...2 V (RMS) Video in: 1 V/75 Ω Y/C in (SVHS)
Connections on the rear panel Audio/Video	**Anschlüsse an der Rückseite** Audio/Video	 Audio in: 0...2 V/R_{IN}=1 kΩ Audio out: 0...2 V/R_L min. 10 kΩ Video in/out: 1 V/75 Ω RGB in: 0.7 V/75 Ω (E1, E3 [1]) Y/C in (SVHS) (E2)
Antenna	Antennenanschluß	75 Ω
Audio output right/left subwoofer	Audio Ausgang links/rechts subwoofer	 0...2 V/10 kΩ (RCA) 0...2 V/10 kΩ 20...180Hz (RMS) (RCA)
VGA input [1]	VGA Eingang [1]	640 x 480 60 Hz 640 x 350 70 Hz 640 x 400 70 Hz 720 x 400 70 Hz
VGA audio input [1]	VGA Audio-Eingang [1]	0...2 V (RMS) (RCA)
Dimensions [3] (Width x depth x height / weight) 28" V3 4:3 32" X6 16:9	**Maße** [3] (Weite x Tiefe x Höhe / Gewicht) 28" V3 4:3 32" X6 16:9	 754 x 500 x 565 mm / 33,0 kg 798 x 569 x 595 mm / 57,0 kg
Specifications are subject to change.	**Änderungen vorbehalten**	
[1] Not in all models. [2] Depends on option modules and picture tube. [3] Approximately.	[1] Nicht in allen Modellen. [2] Abhängig von Optionsmodulen und Bildröhre. [3] Ungefähr.	

Block diagram, power supply 4:3

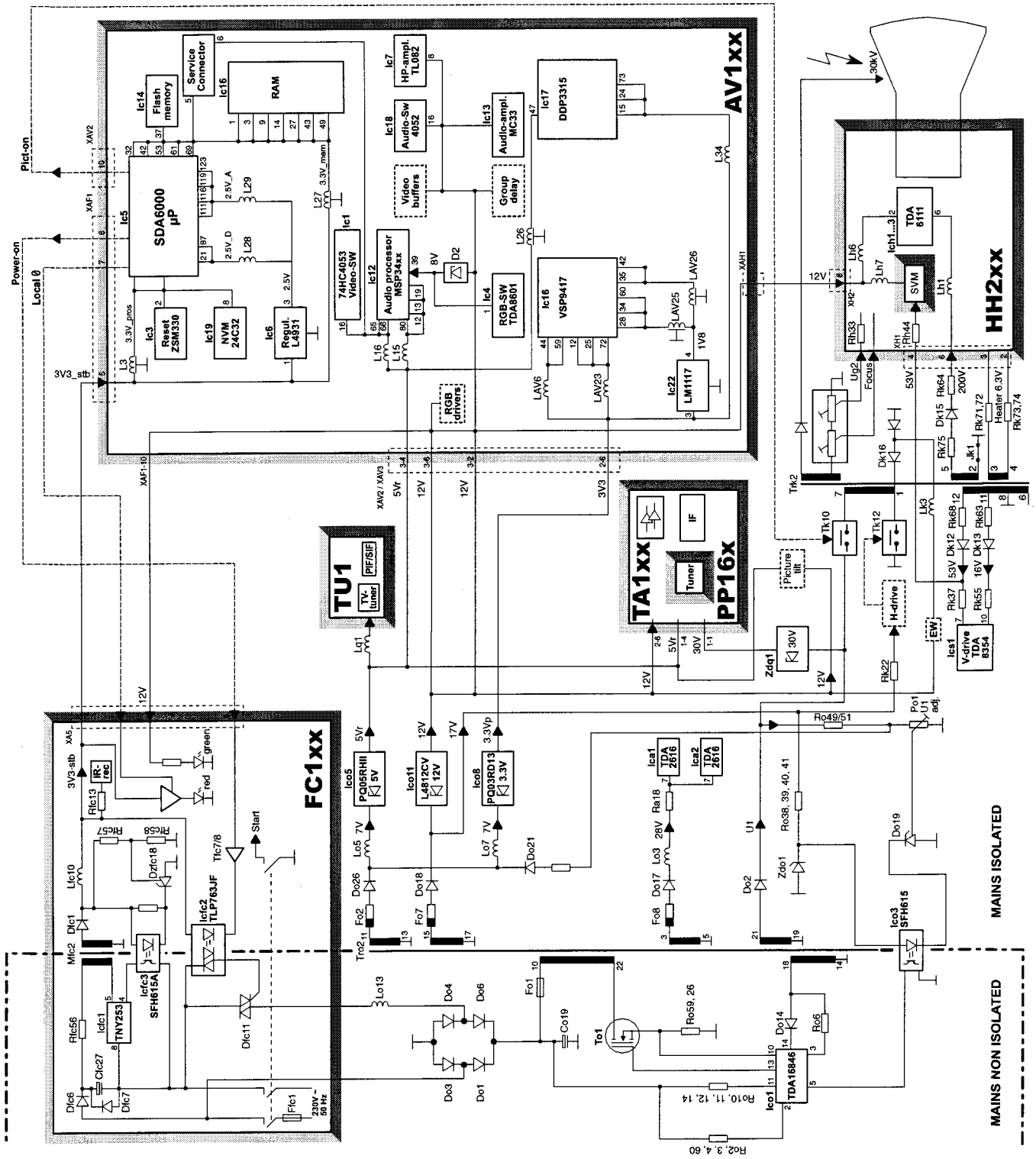

Block diagram, power supply 16:9

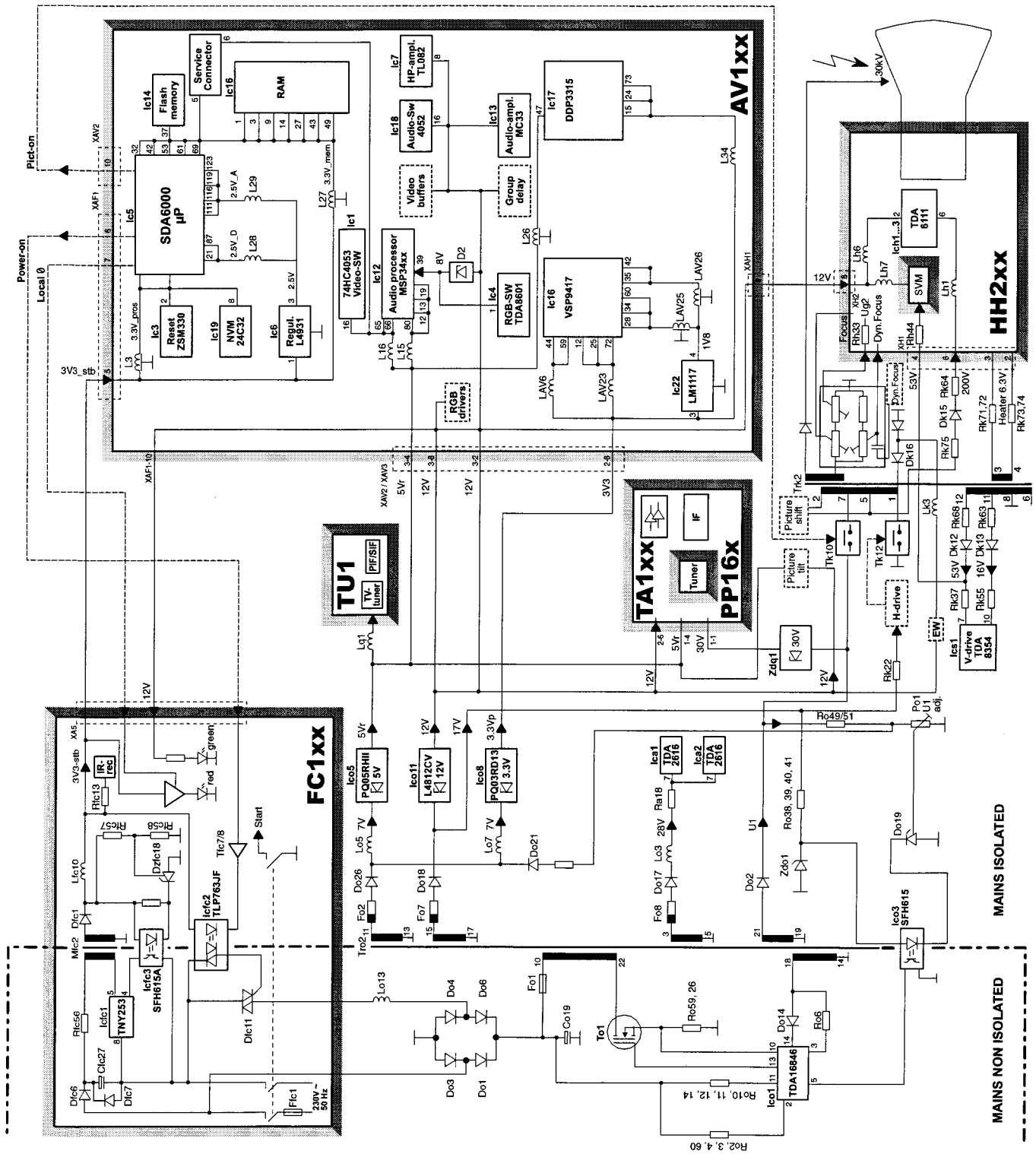

Block diagram, signal routes

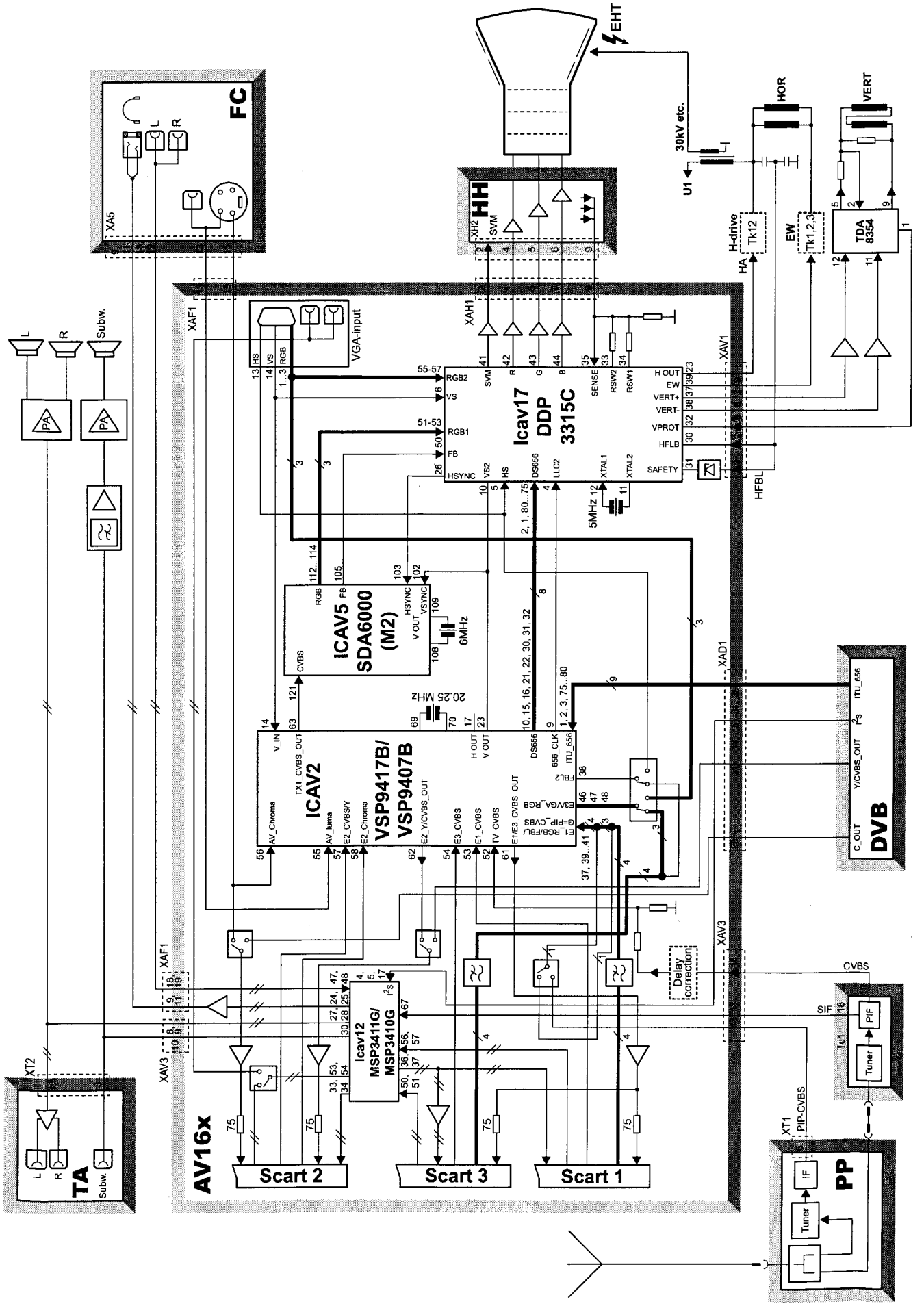

Block diagram, control signals

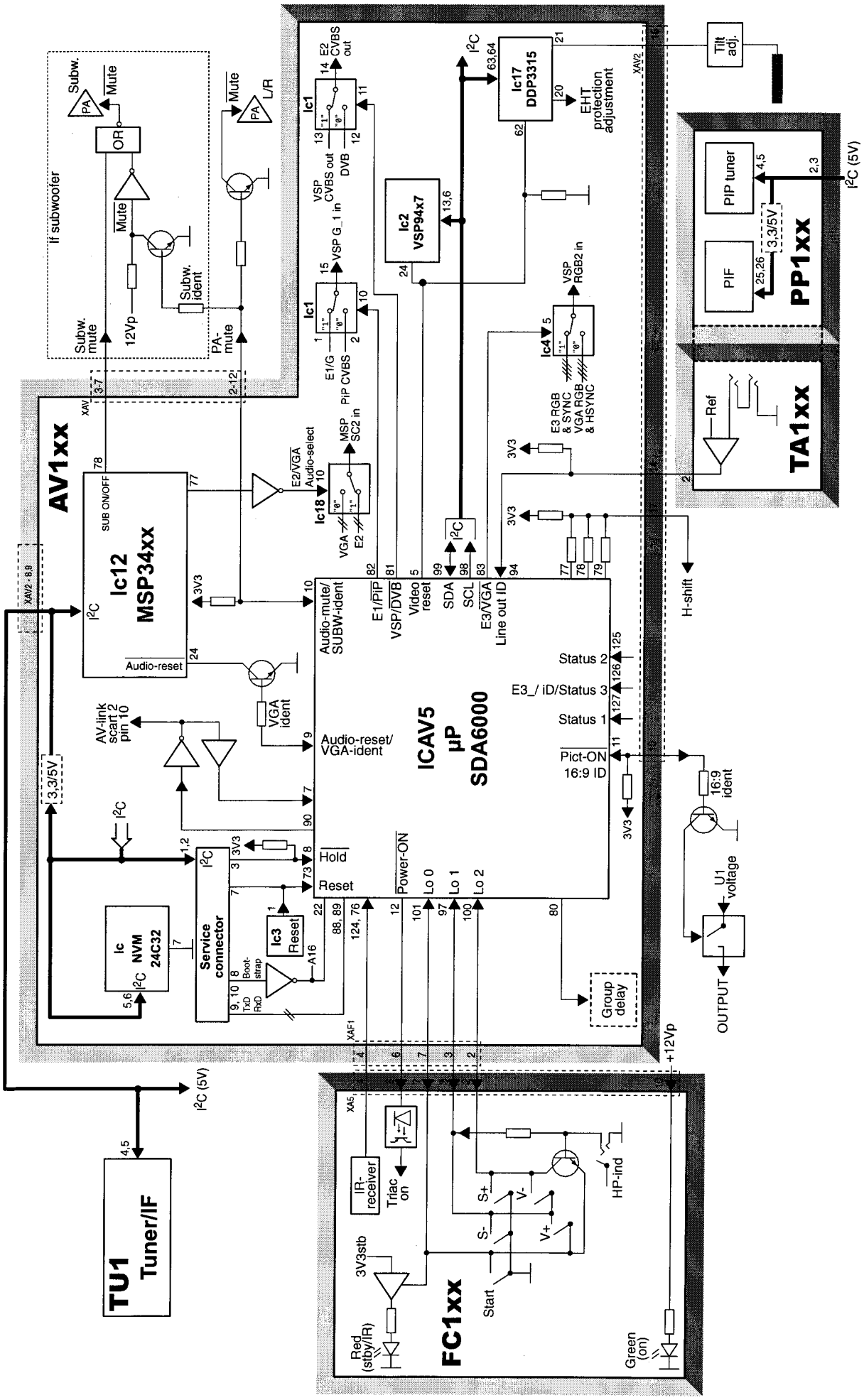

SCART connector (E1, E2 & E3)

Pin	SCART 1 (E1)	SCART 2 (E2)	SCART 3 (E3, not in all models)
1	Audio out R, 0.5V (RMS)	Audio out R, 0.5V (RMS)	Audio out R, 0.5V (RMS)
2	Audio in R, 0.5V (RMS)	Audio in R, 0.5V (RMS)	Audio in R, 0.5V (RMS)
3	Audio out L, 0.5V (RMS)	Audio out L, 0.5V (RMS)	Audio out L, 0.5V (RMS)
4	Ground, audio	Ground, audio	Ground, audio
5	Ground, blue	Ground	Ground, blue
6	Audio in L, 0.5V (RMS)	Audio in L, 0.5V (RMS)	Audio in L, 0.5V (RMS)
7	RGB input, blue	S-video chrominance out (copy from front AV-connector)	RGB input, blue
8	Switching voltage	Switching voltage	Switching voltage
	0...2V : no function	0...2V : no function	0...2V : no function
	4.5...7V : 16/9 picture ratio	4.5...7V : 16/9 picture ratio	4.5...7V : 16/9 picture ratio
	9.5...12V : normal picture ratio	9.5...12V : normal picture ratio	9.5...12V : normal picture ratio
9	Ground, green	Ground	Ground, green
10	-	AV-link bidirectional control logical 0: max 0.6V logical 1: min 3.7V	-
11	RGB input, green	-	RGB input, green
12	-	-	-
13	Ground, red	S-video ground (chrominance)	Ground, red
14	Ground	Ground	Ground
15	RGB input, red	S-video input (chrominance)	RGB input, red
16	Switching voltage, RGB blanking	-	Switching voltage, RGB blanking
17	Ground, video	Ground, video	Ground, video
18	Ground	Ground	Ground
19	Video out, 1 Vpp/75	Video out, 1 Vpp/75 S-video out (luminance)	Video out, 1 Vpp/75
20	Video in, 1 Vpp/75 RGB sync in	Video in, 1 Vpp/75 S-video in (luminance)	Video in, 1 Vpp/75 RGB sync in
21	Shield	Shield	Shield

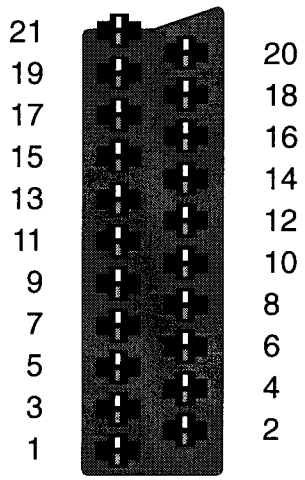

Operating instructions

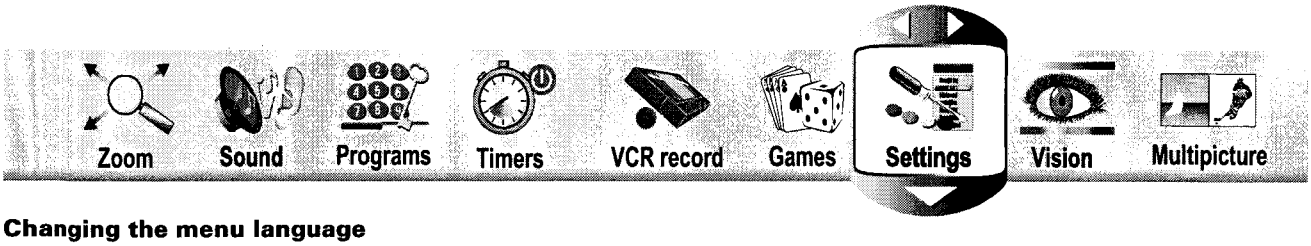

Changing the menu language

1. Press the menu button to select the main menu.
2. Select "Settings" with the arrow buttons (left/right) and press the arrow button down.
3. Select "Language" with the arrow buttons (up/down) and change the menu language with the arrow buttons (left/right).
4. Press the TV button to exit.

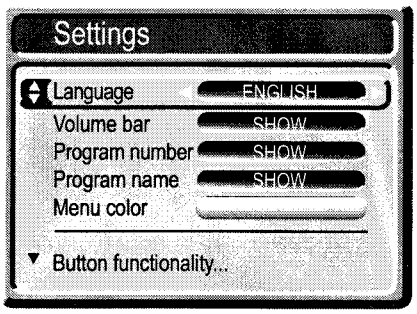

Manual tuning

1. Select the programme number you want to tune.
2. Press the MENU button.
3. Select "Programs" with the arrow buttons (left/right) and press the arrow button down.
4. Select "Manual tuning" with the arrow buttons (up/down) and press the arrow button right.
5. Press the arrow button right and select "Channel search"with the arrow buttons (up/down).
6. Press the arrow button right to start channel search.
7. Press the TV button and then the arrow button right to confirm.
8. Press the OK button to store
9. Press the TV button to exit.

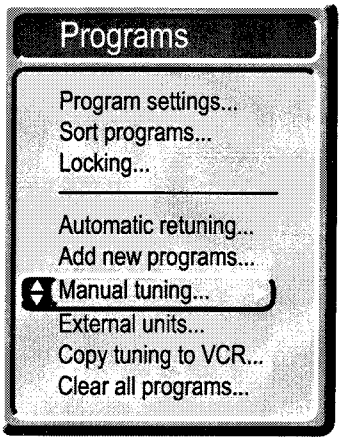

APSi (Automatic Programming System)

1. Press the MENU button.
2. Select "Programs" with the arrow buttons (left/right) and press the arrow button down.
3. Select "Automatic retuning" with the arrow buttons (up/down) and press the arrow button right.
4. To retune the channels, press the arrow button right and then the OK button.
5. Press the TV button to exit.

Service adjustments

Service mode activation

The receiver must be switched on or be in stand-by mode when activating the service mode.

1. Keep the ◢- (volume minus) button on **local control unit** pressed and at the same time start entering password: First MENU ,TV and "i" with the **remote control**. Release the ◢- button after the TV button has been pressed. If the receiver is in stand-by mode after the password was entered, switch on the receiver by pressing the TV button.
2. Activate the service mode by pressing the i button. The following adjustment menu appears on the screen:

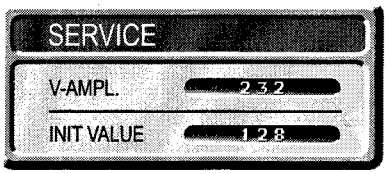

The adjustment number and name, initializing value (down) and adjustment value (up) are shown in the menu.

3. Exit the service mode by pressing the TV button or logout by switching off the receiver with the mains switch.

Note! Service mode activation stays enabled until the receiver is switched off with the mains switch.

Initialization of NVRAM

In case that the NVRAM is replaced, it must be initialized and configured.

1. Activate the service mode in stand-by mode as described in *"Service mode activation"*.
2. Initialize the NVRAM by entering the key code: BLUE, 2, 5, 4 and OK. Initializing will take about 20 s. The receiver switches on automatically when the initializing is ready.
3. Activate the service mode by pressing the i button.
4. Press the GREEN button to configure the receiver, see also chapter "Configuration and fault diagnostics". (check that the automatic configuration results in IIC DEV 1-3 and IF OPT bytes are corresponding to the actual configuration of the receiver).
5. Set manual option bytes (TXT OPT, SYS OPT 1 and 2) to correspond to the actual configuration of the receiver. Press the OK button to store the settings.
6. Switch off the receiver by pressing the mains switch.
7. Switch on the receiver by pressing the mains switch and tune one or more tv channels.
8. Activate the service mode and make the necessary service adjustments.
9. Switch off the receiver by pressing the mains switch.

Service adjustments

Configuration and fault diagnosis

The receiver must be configured after adding or removing any options. By pressing the GREEN button in service mode, the processor checks the configuration of the receiver and shows the settings on the screen. The configuration can be stored by pressing the OK button.

Note! Disconnect Scart 3 and RCA (line out) cables before configuring the receiver.

This feature can also be used in fault diagnosis. If an option bit is not '1' when it should be, the IC (or feature) is either not present or faulty.

Note! IIC DEV 1-3 and IF OPT bytes are configured automatically every time the GREEN button is pressed. TXT OPT, SYS OPT 1 and 2 bytes must be set manually.

Changing the option bytes

1. Select the configuration mode by pressing the GREEN button in the service mode.

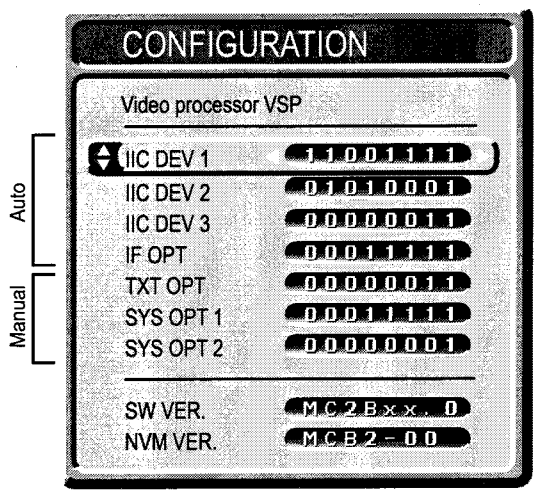

SW VER. = µP software version.
NVM VER. = NVRAM software version.

2. Select IIC Device byte 1 - 4, Option byte 1 - 5 or Uif flags byte with the arrow buttons (up/down).

3. The name of a responding bit can be seen when using the arrow buttons (up/down and left/right). The selected bit is shown highlighted.

4. Set / clear the bits with the number buttons (0 ... 7).

5. Store the settings by pressing the OK button.

6. Return to the normal service mode by pressing the GREEN button.

Option byte description

Bit	Description	Setting 7 6 5 4 3 2 1 0	'1'	'0'
	IIC DEV 1	**11001111**		
0	Video processor VSP		Yes	No
1	Deflection processor DPP		Yes	No
2	TV Tuner PLL		Yes	No
3	TV Tuner IF		Yes	No
4	PIP Tuner PLL		Yes	No
5	PIP Tuner IF		Yes	No
6	Audio processor MSP		Yes	No
7	Subwoofer		Yes	No
	IIC DEV 2	**01010001**		
0	Virtual sound MSP		Yes	No
1...3	Free		Yes	No
4	Tube 16:9		Yes	No
5	VGA		Yes	No
6	PIP processor		Yes	No
7	Free		Yes	No
	IIC DEV 3	**00000011**		
0	Ext 3		Yes	No
1	Lineouts module		Yes	No
2...7	Free		Yes	No
	IF OPT	**00011111**		
0	B/G system in IF		Yes	No
1	I system in IF		Yes	No
2	D/K system in IF		Yes	No
3	L system in IF		Yes	No
4	L' system (Inv I L) in IF		Yes	No
5	NTSC M system in IF		Yes	No
6	Free		Yes	No
7	Free		Yes	No
	TXT OPT	**00000011**		
0	TOP enabled		Yes	No
1	FLOF enabled		Yes	No
2...7	Free		Yes	No
	SYS OPT 1	**00011111**		
0	E0 (A/V connector) installed		Yes	No
1	E1 RGB disabled on non-E1/E3 programs		Yes	No
2	ACI enabled		Yes	No
3	Carrier mute enabled		Yes	No
4	Loudness enabled		Yes	No
5	Tube type bit 0		Yes	No
6	Tube type bit 1		Yes	No
7	Free		Yes	No
	SYS OPT 2	**00000001**		
0	Picture tilt		Yes	No
1	Autostart, Special monitor use		Yes	No
2...6	Free		Yes	No
7	Limited volume		Yes	No

Service adjustments via I²C-bus

Remote control buttons in service mode
When the receiver is in the service mode you can select the normal TV mode by pressing the TV button and return to the service mode by pressing the i button. The number and the arrow buttons are used for service adjustments. The OK button stores the settings.

Adjustments for different picture formats
Make all adjustments with a PAL signal unless otherwise mentioned. Make 4:3 set adjustments with normal 4:3 (classic) picture format and 16:9 set adjustments with wide (16:9) picture format. Then make the necessary adjustments with other picture formats/signals. The required adjustments are shown in the table below.

Note! Check the configuration of the receiver before making the adjustments and make only the necessary adjustments.

Making the service adjustment
1. Give a two digit code which determines an adjustment (e.g. 04 = width, see the following tables) with the number buttons or select an adjustment stepping with the arrow buttons (up/down).

Note! Power supply and Ug2 adjustments must be done before picture geometry adjustments.

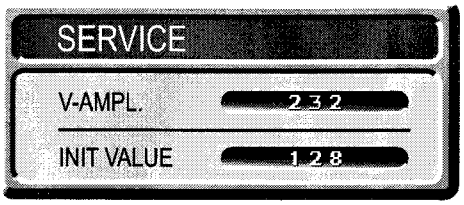

2. Adjust with the cursor buttons (left/right).

3. Store the new value by pressing the OK button.

Note!
- *To avoid incomplete adjustments store each adjustment in the memory immediately after an adjustment has been made.*
- *If an adjustment has to be made separately for different picture format/signal, select first the normal TV mode by pressing the TV button and select then the desired picture format/signal. Return to service mode by pressing the i button.*

Making the picture geometry adjustments
To help the adjustment of geometry with living picture a red border appears around the deflection area of the picture. It can be switched ON/OFF with the RET-button.

Picture geometry adjustments

Adjustment	Code	OSD name	4:3 classic/16:9 wide	Progressive scan 50 Hz	VGA 60Hz	VGA 70Hz	Note!
Vertical amplitude	00	V-AMPL.	X	X	X	X	
Vertical off-centre shift	01	V-SHIFT	X	X	X	X	
Linearity	02	LINEARITY	X	X		X	
Vertical S-correction	03	S-CORR.	X	X		X	
Width	04	WIDTH	X	X	X	X	
Horizontal shift deflection	05	H-SHIFT	X				Adjust deflection to center of screen (only in VGA sets).
Horizontal phase video	06	PHASE	X				
Horizontal blanking	07	HOR BLANK	X				First find the adjustment values where the blanking begins to come over the red area (left/right) and then adjust blanking to the middle of these adjustment values.
Parabola	08	PARABOLA	X	X	X	X	
Upper corners	09	CORNER UP	X	X	X	X	
2nd upper corners	10	CORN 2 UP	X	X			
Lower corners	11	CORNER LO	X	X	X	X	
2nd lower corners	12	CORN 2 LO	X	X			
Bow	13	BOW	X	X		X	
Trapezium	14	TRAPEZIUM	X	X		X	
Parallelogram distortion	15	ANGLE	X	X		X	

VGA 60 Hz = Windows mode
VGA 70 Hz = DOS mode

Other adjustments

Adjustment	Code	OSD name	Note!
Screen grid voltage	16	G2	Adjust the Ug2 until the display shows 140 ± 20. *Note! Don't press the OK button if only Ug2 adjustment is needed.* If the colour temperature adjustment is needed, start it here by pressing the OK button. This restores the default value of codes 14...19 and locks the reference value (20...22) of the highest gun.
Red gain	17	R GAIN	
Green gain	18	G GAIN	This procedure is necessary e.g. when the picture tube,CRT-module
Blue gain	19	B GAIN	etc. has been replaced.
			First adjust the GAIN values (white area to 80 nit) and then REF values
Red reference	20	R REF.	(dark area to 1.5 nit). Check then GAIN values again and adjust them
Green reference	21	G REF.	again if needed.
Blue reference	22	B REF.	Adjusting: Pressing the RET button changes gray-picture / external-picture and pressing the RED (down) and the YELLOW (up)button changes the contrast value.
Subcarrier adjust	23	SUB-CARRIER	Start adjustment by pressing right arrow button. Press the OK button to store the value (must be between 29...35).
High voltage limitation	24	EHT PROT	Adjust the value upwards until the TV picture becomes blanked. At the same time the value will be decreased automatically with 60 steps. After that press the OK button to store the adjustment.

Variable adjustments

Adjustment	Code	OSD name	Note!
BCL (beam current limitation) threshold	25	BCL THRES	Picture tube related default values are given in separate info (CRT dependant adjustments).
BCL gain	26	BCL GAIN	
Threshold for H/V-amplitude EHT corr.	27	EHT THRES	
EHT compensation for H-amplitude	28	EHTH1	
EHT compensation for V-amplitude	29	EHTV1	
H-compensation with higher beam currents	30	EHTH2	
V-compensation with higher beam currents	31	EHTV2	

Service adjustments

O Power supply block

Supply voltage and protection circuit

1. Set the brightness and the contrast to the normal level. Connect a universal voltmeter to the cathode of **Do2.**

2. Adjust the **U1 voltage** with **Po1**. The voltage depends on the picture tube type, refer to the section "Variable components".

Safety features

Activation of the service mode disables the following features:

- Horizontal safety function (EHT)
- Start-up checking: Video processor and Deflection processor fail to initialize correctly.

K Horizontal deflection block

Horizontal linearity

Adjust with **Lk1.**

Focusing

Set the brightness and the contrast to the normal level. Use the crosshatch pattern and adjust the picture for optimum resolution.

(Screen grid voltage) Ug2 voltage

Ug2 voltage can easily be adjusted with help of the on screen display, see section "other adjustments" / screen grid voltage.

Ug2 adjusting with oscilloscope:

1. Set the brightness and the colour saturation to the normal level and the contrast to minimum.

2. At the end of the vertical blanking, there is a black current measurement pulse (clamp pulse) at **pin 9** of **ICh1**, **ICh2** and **ICh3**. Use an oscilloscope and find the output stage with the highest cut-off (i.e. the highest voltage during the black current measurement pulse).

3. Adjust the voltage of the clamp pulse to **+140 V** with Ug2 (see figure).

Note! Adjust the voltage with a clamp pulse.

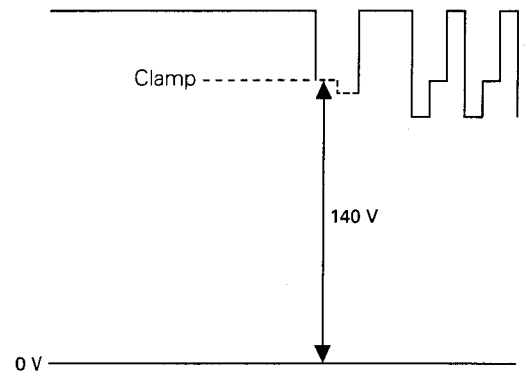

To reset the remote control

1. Remove batteries

2. Reset the remote control by pressing the BLUE button approx. 10 seconds and then mount the batteries.

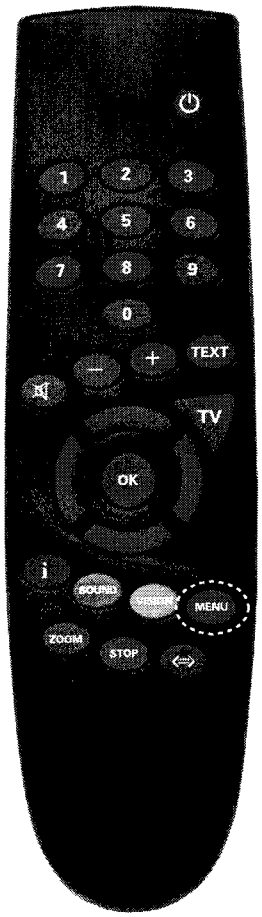

Bedienungsanleitung

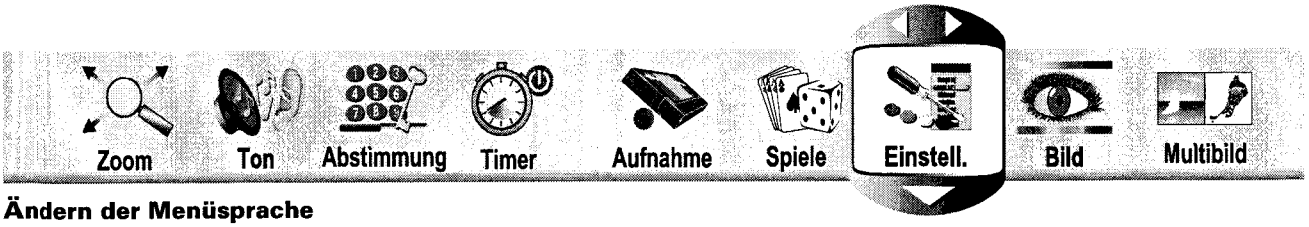

Ändern der Menüsprache

1. Drücken Sie zur Wahl des Hauptmenüs die menütaste.
2. Wählen Sie "Einstellungen" mit den Pfeiltasten (links/rechts) und drücken Sie die abwärtszeigende Pfeiltaste.
3. Wählen Sie "Sprache" mit den Pfeiltasten (aufwärts/abwärts) und ändern Sie die Menüsprache mit den Pfeiltasten (links/rechts).
4. Beenden Sie den Vorgang durch Drücken der Taste TV.

Manuelle Abstimmung

1. Wählen Sie die Programmnummer, die Sie abstimmen möchten.
2. Drücken Sie die Taste MENU.
3. Wählen Sie "Programme" mit den Pfeiltasten (links/rechts) und drücken Sie die abwärtszeigende Pfeiltaste.
4. Wählen Sie "Manuelle Abstimmung" mit den Pfeiltasten (aufwärts/abwärts) und drücken Sie die rechte Pfeiltaste.
5. Drücken Sie die rechte Pfeiltaste und wählen Sie "Kanalsuche"mit den Pfeiltasten (aufwärts/abwärts).
6. Drücken Sie die rechte Pfeiltaste, um die Kanalsuche zu starten.
7. Drücken Sie zur Bestätigung die Taste TV und dann die rechte Pfeiltaste.
8. Drücken Sie zur Speicherung die Taste OK.
9. Beenden Sie den Vorgang durch Drücken der Taste TV.

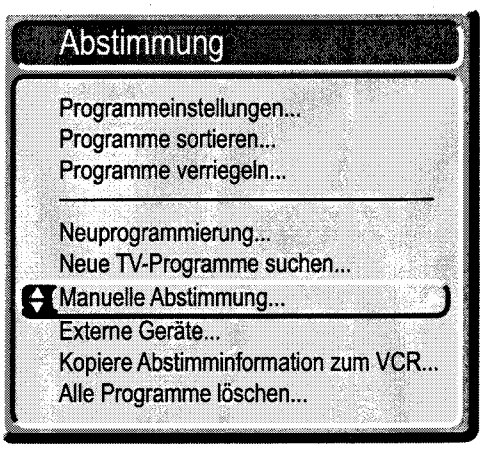

APSi (Automatisches Programmiersystem)

1. Drücken Sie die Taste MENU.
2. Wählen Sie "Programme" mit den Pfeiltasten (links/rechts) und drücken Sie die abwärtszeigende Pfeiltaste.
3. Wählen Sie "Automatische Neuabstimmung" mit den Pfeiltasten (aufwärts/abwärts) und drücken Sie die rechte Pfeiltaste.
4. Drücken Sie zur Neuabstimmung der Kanäle die rechte Pfeiltaste und dann die Taste OK.
5. Beenden Sie den Vorgang durch Drücken der Taste TV.

Service-Einstellungen

Aktivierung des Servicemodus

Das Fernsehgerät muss bei der Aktivierung des Servicemodus eingeschaltet oder im Stand-by-Modus sein.

1. Halten Sie die Taste- ◢ (Lautstärke verringern) an den **Bedienelementen am Fernsehgerät** gedrückt und drücken Sie gleichzeitig mit der **Fernbedienung** nacheinander die Tasten MENU, TV und i. Lassen Sie die Taste- ◢ nach dem Drücken der Taste TV los. Falls das Fernsehgerät nach Eingabe dieses Codes im Stand-by-Modus ist, schalten es durch Drücken der Taste TV ein.
2. Aktivieren Sie den Servicemodus durch Drücken der Taste-i. Das folgende Einstellmenü erscheint auf dem Bildschirm:

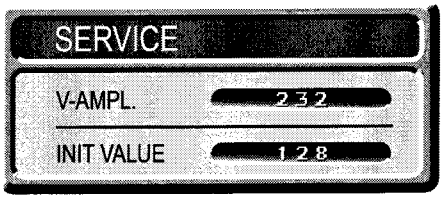

Einstellzahl und -Name, der Initialwert (abwärst) und der Einstellwert (aufwärst) werden im Menü gezeigt.

3. Beenden Sie den Servicemodus durch Drücken der Taste TV oder loggen Sie sich durch Ausschalten des Fernsehgerätes mit dem Netzschalter aus.

Hinweis: Der Servicemodus bleibt aktiviert, bis das Fernsehgerät mit dem Netzschalter ausgeschaltet wird.

Initialisierung des NVRAM

Falls der NVRAM ausgetauscht worden ist, muß dieser initialisiert und konfiguriert werden.

1. Aktivieren Sie im Stand-by-Modus den Servicemodus wie unter "Aktivierung des Servicemodus" beschrieben.
2. Initialisieren Sie den NVRAM durch Eingabe des Tastencodes: Blaue Taste, 2, 5, 4 und OK. Die Initialisierung dauert etwa 20 Sekunden. Das Fernsehgerät schaltet sich automatisch ein, wenn die Initialisierung vollzogen ist.
3. Aktivieren Sie den Servicemodus durch Drücken der Taste-i.
4. Drücken Sie die grüne Taste zur Konfiguration des Fernsehgerätes; siehe auch Kapitel "Konfiguration und Fehlerdiagnose". (Stellen Sie sicher, daß die automatische Konfiguration IIC DEV 1-3 ergibt und die IF OPT-Bytes der aktuellen Konfiguration des Fernsehgerätes entsprechen.)

Service-Einstellungen

5. Stellen Sie die manuellen Optionsbytes (TEXT OPT, SYS OPT 1 und 2) auf die aktuelle Konfiguration des Fernsehgerätes ein. Drücken Sue zur Speichern der Einstellungen die Taste OK.
6. Schalten Sie das Fernsehgerät mit dem Netzschalter aus.
7. Schalten Sie das Fernsehgerät mit dem Netzschalter ein und stimmen Sie einen oder mehrere Fernsehkanäle ab.
8. Aktivieren Sie den Servicemodus und nehmen Sie die nötigen Serviceeinstellungen vor.
9. Schalten Sie das Fernsehgerät mit dem Netzschalter aus.

Konfiguration und Fehlerdiagnose

Das Fernsehgerät muß nach Hinzufügen oder Wegnahme von Optionen konfiguriert werden. Bei Drücken der grünen Taste im Servicemodus überprüft der Prozessor die Konfiguration des Fernsehgerätes und zeigt die Einstellungen auf dem Bildschirm. Die Konfiguration kann durch Drücken der Taste-OK gespeichert werden.

Hinweis! Entfernen Sie vor der Konfiguration des Fernsehgerätes die Scart 3- und RCA-Ausgangskabel.

Dieses Feature kann auch bei der Fehlerdiagnose verwendet werden. Falls ein Optionsbit nicht wie erwartet '1' sein sollte, ist der IC oder das Feature entweder nicht vorhanden oder fehlerhaft.

Hinweis: Die Bytes IIC DEV 1 - 3 und IF OPT werden immer bei Drücken der grünen Taste automatisch konfiguriert. Die Bytes TXT OPT sowie SYS OPT 1 und 2 müssen manuell eingestellt werden.

Ändern der Optionsbytes

1. Wählen Sie den Konfigurationsmodus durch Drücken der grünen Taste im Servicemodus.

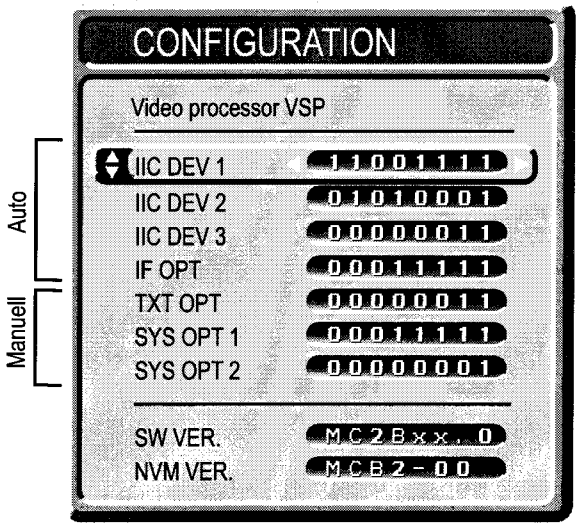

SW VER. = Softwareversion µP.
NVM VER. = Softwareversion NVRAM.

2. Wählen Sie den IIC Gerätebyte 1 - 4, den Optionsbyte 1 - 5 oder den UIF-Zustandsbyte mit den Pfeiltasten (auf-/abwärts).
3. Der Name eines entsprechenden Bits wird bei Drücken der Pfeiltasten (auf-/abwärts und links/rechts) sichtbar. Das gewählte Bit erscheint hervorgehoben.
4. Stellen bzw. löschen Sie die Bits mit den Zifferntasten (0 ... 7).
5. Speichern Sie die Einstellungen durch Drücken der Taste-OK.
6. Kehren Sie durch Drücken der grünen Taste in den normalen Servicemodus zurück.

Beschreibung der Optionsbytes

Bit	Beschreibung	Einstellung 7 6 5 4 3 2 1 0	'1'	'0'
	IIC DEV 1	**11001111**		
0	Videoprozessor VSP		Ja	Nein
1	Ablenkprozessor DPP		Ja	Nein
2	TV-Tuner PLL		Ja	Nein
3	TV-Tuner IF		Ja	Nein
4	PIP-Tuner PLL		Ja	Nein
5	PIP-Tuner IF		Ja	Nein
6	Audioprozessor MSP		Ja	Nein
7	Subwoofer		Ja	Nein
	IIC DEV 2	**01010001**		
0	Virtueller Sound MSP		Ja	Nein
1...3	Frei		Ja	Nein
4	Bildröhre 16:9		Ja	Nein
5	VGA		Ja	Nein
6	PIP-Prozessor		Ja	Nein
7	Frei		Ja	Nein
	IIC DEV 3	**00000011**		
0	Ext 3		Ja	Nein
1	Ausgangsmodul		Ja	Nein
2...7	Frei		Ja	Nein
	IF OPT	**00011111**		
0	B/G -System im IF		Ja	Nein
1	I-System im IF		Ja	Nein
2	D/K-System im IF		Ja	Nein
3	L-System im IF		Ja	Nein
4	L'-System (Inv I L) im IF		Ja	Nein
5	NTSC M-System im IF		Ja	Nein
6...7	Frei		Ja	Nein
	TXT OPT	**00000011**		
0	TOP aktiviert		Ja	Nein
1	FLOF aktiviert		Ja	Nein
2...7	Frei		Ja	Nein
	SYS OPT 1	**00011111**		
0	E0 (A/V-Anschluß) installiert		Ja	Nein
1	E1 RGB deaktiviert bei nicht-E1/E3 Programmen		Ja	Nein
2	ACI aktiviert		Ja	Nein
3	Träger für Stummschaltung aktiviert		Ja	Nein
4	Lautstärke aktiviert		Ja	Nein
5	Bildneigung Bit 0		Ja	Nein
6	Bildneigung Bit 1		Ja	Nein
7	Frei		Ja	Nein
	SYS OPT 2	**00000001**		
0	Bildneigung		Ja	Nein
1	Autostart, Verwendung als Spezialmonitor		Ja	Nein
2...6	Frei		Ja	Nein
7	Begrenzte Lautstärke		Ja	Nein

Service-Einstellungen über den I2C-Bus

Tasten der Fernbedienung im Servicemodus
Wenn sich das Fernsehgerät im Servicemodus befindet, kann ein normales Fernsehrprogramm durch Drücken der Taste TV gewählt werden. Durch Drücken der Taste i gelangen Sie wieder in den Servicemodus.
Die Ziffern- und die Pfeiltasten werden für Serviceeinstellungen verwendet. Die Taste-OK speichert die Einstellungen.

Einstellungen für verschiedene Bildformate
Wenn nicht anders beschrieben, führen Sie sämtliche Einstellungen mit einem PAL-Signal durch. Die Einstellungen für Geräte im 4:3-Format werden im normalen (klassischen) Bildformat 4:3 und die für Geräte im 16:9-Format im breiteren Bildformat 16:9 vorgenommen. Führen Sie dann die nötigen anderen Bildformat- und Signaleinstellungen durch. Die nötigen Einstellungen werden in der Tabelle unten gezeigt.

Hinweis: Überprüfen Sie vor Durchführung der Einstellungen die Konfiguration des Fernsehgerätes und führen Sie nur die nötigen Einstellungen durch.

Durchführen der Serviceeinstellung
1. Geben Sie mit den Ziffertasten einen zweistelligen Code ein, der eine Einstellung festlegt (z.B. 04 = Weite, siehe folgende Tabellen) oder wählen Sie eine Einstellung mit den Pfeiltasten (aufwärts/abwärts).

Hinweis: Einstellungen am Netzteil und für UG2 müssen vor den Einstellungen der Bildgeometrie durchgeführt werden.

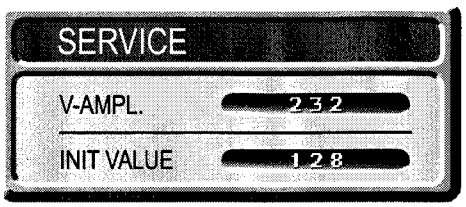

2. Nehmen Sie die Einstellung mit den Cursortasten (links/rechts) vor.
3. Speichern Sie den neuen Wert durch Drücken der Taste OK.

Hinweis!
- *Um unvollständige Einstellungen zu vermeiden, speichern Sie sofort jede Einstellung nachdem diese durchgeführt wurde.*
- *Wenn eine Einstellung getrennt für verschiedene Bildformate und -Signale durchgeführt werde muß, wählen Sie erst durch Drücken der Taste TV den normalen Fernsehmodus und wählen dann das gewünschte Bildformat und -Signal. Gehen Sie durch Drücken der Taste i in den Servicemodus zurück.*

Einstellungen der Bildgeometrie
Um die Einstellung der Bildgeometrie bei laufendem Fernsehbild zu erleichtern, erscheint an der Ablenkfläche des Bildes ein roter Rand, der mit der Taste RET ein- und ausgeblendet werden kann.

Einstellungen der Bildgeometrie

Einstellung	Code	Name im Display	4:3 klassisch / 16:9 weit	Schrittweises Abtasten 50 Hz	VGA 60 Hz	VGA70 Hz	Hinweis!
Vertikale Amplitude	00	V-AMPL.	X	X	X	X	
Vertikale Außermittenverchiebung	01	V-SHIFT	X	X	X	X	
Linearität	02	LINEARITY	X	X		X	
Vertikale S-Korrektur	03	S-CORR.	X	X		X	
Weite	04	WIDTH	X	X	X	X	
Horizontale Ablenkungsverschiebung	05	H-SHIFT	X				Stellen Sie die Ablenkung auf die Bildschirmmitte ein (nur bei VGA-Geräten).
Horizontalphase Video	06	PHASE	X				
Horizontale Austastung	07	HOR BLANK	X				Finden Sie zuerst die Einstellwerte, bei denen die Austastung über die rote Fläche zu treten beginnt (links/rechts) und stellen Sie dann die Austastung auf den Mittelwert dieser Einstellwerte ein.
Parabol	08	PARABOLA	X	X	X	X	
Obere Ecken	09	CORNER UP	X	X	X	X	
Zweite obere Ecken	10	CORN 2 UP	X	X			
Untere Ecken	11	CORNER LO	X	X	X	X	
Zweite untere Ecken	12	CORN 2 LO	X	X			
Bogen	13	BOW	X	X		X	
Trapez	14	TRAPEZIUM	X	X		X	*VGA 60 Hz = Windows-Modus*
Parallelogramm-Verzerrung	15	ANGLE	X	X		X	*VGA 70 Hz = DOS-Modus*

Andere Einstellungen

Einstellung	Code	Name im Display	Hinweis!
Schirmgitterspannung	16	G2	Stellen Sie Ug2 ein, bis das das Display einen Wert von 140 ±20 zeigt. *Hinweis: Drücken Sie nicht die OK-Taste, wenn nur die Einstellung von Ug2 erforderlich ist.* Ist die Einstellung der Farbtemperatur nötig, beginnen Sie durch Drücken der Taste OK. Dieses stellt die Ursprungswerte der Codes 14...19 wieder her und sperrt den Referenzwert (20...22) der höchsten Elektronenkanone.
Rotverstärkung	17	R GAIN	
Grünverstärkung	18	G GAIN	Dieser Vorgang ist nötig, wenn z.B. die Bildröhre oder das CRT-Modul
Blauverstärkung	19	B GAIN	ausgetauscht worden sind. Stellen Sie zuerst die Verstärkungswerte (weiße Fläche auf 80 nit) und dann die Referenzwerte ein (dunkle
Rotreferenz	20	R REF.	Fläche auf 1.5 nit). Überprüfen Sie dann nochmals die
Grünreferenz	21	G REF.	Verstärkungswerte und stellen Sie diese - wenn nötig - erneut ein.
Blaureferenz	22	B REF.	Einstellung: Drücken der Taste RET verändert das Graustufenbild/ externes Bild und Drücken der roten (abwärst) und der gelben Taste (aufwärst) verändert den Kontrastwert.
Einstellung des Hilfsträgers	23	SUB-CARRIER	Starten Sie die Einstellung durch Drücken der rechten Pfeiltaste. Drücken Sie die Taste OK zur Speicherung des Wertes (er soll zwischen 29 und 35 liegen).
Hochspannungsbegrenzung	24	EHT PROT	Stellen Sie den Wert so hoch ein, bis das Fernsehbild ausgetastet wird. Gleichzeitig wird der Wert automatisch in 60 Stufen verringert. Drücken Sie anschließend zur Speicherung der Einstellung die Taste OK.

Variable Einstellungen

Einstellung	Code	Name im Display	Hinweis!
Schwellenwert für Strahlstrombegrenzung	25	BCL THRES	Für Standardwerte der Bildröhre siehe separate Hinweise (CRT dependant adjustments)
Verstärkung für Strahlstrombegrenzung	26	BCL GAIN	
Schwellenwert für H/V-Amplitude (EHT-Korrektur)	27	EHT THRES	
EHT-Kompensation für Horizontalamplitude	28	EHTH1	
EHT-Kompensation für Vertikalamplitude	29	EHTV1	
H-Kompensation bei höheren Strahlströmmen	30	EHTH2	
V-Kompensation bei höheren Strahlströmmen	31	EHTV2	

O Netzteil

Versorgungsspannung und Schutzschaltung

1. Stellen Sie die Helligkeit und den Kontrast auf einen normalen Wert ein. Schließen Sie ein Universal-Voltmeter an der Kathode von **Do2** an.

2. Stellen Sie die **Spannung U1** mit **Po1** ein. Die Spannung hängt vom Typ der Bilfröhre ab, siehe auch Abschnitt "Variable Bauteile".

Sicherheitsfeatures

Die Aktivierung des Servicemodus setzt folgende Features außer Kraft:

- Horizontale Sicherheitsfunktion (EHT)
- Überprüfung bei Beginn: Videoprozessor und Ablenkungsprozessor können nicht korrekt initialisieren.

O Horizontal-Ablenkeinheit

Horizontale Linearität

Mit **Lk1** einstellen.

Fokussierung

Stellen Sie Helligkeit und Kontrast auf den normalen Wert ein. Benutzen Sie ein Kreuzschraffurmuster und stellen Sie das Bild auf die optimale Auflösung ein.

(Schirmgitterspannung) Spannung Ug2

Die Spannung Ug2 kann leicht mit Hilfe des Bildschirmanzeige eingestellt werden, siehe Abschnitt "Andere Einstellungen" / Schirmgitterspannung.

Einstellung von Ug2 mit dem Oszilloskop

1. Stellen Sie Helligkeit und Farbsättigung auf den normalen Wert und den Kontrast auf den kleinsten Wert ein.

2. Am Ende des vertikalen Austastens ist ein Schwarzstrom-Meßimpuls (Klemmimpuls) an **Pin 9** von **ICh1**, **ICh2** und **ICh3**. Verwenden Sie ein Oszilloskop und ermitteln Sie die Ausgangsstufe mit der höchsten Grenzspannung (entpricht der höchsten Spannung während des Schwarzstrom-Meßimpulses).

3. Stellen Sie die Spannung des Klemmimpulses mit UG2 auf **+140 V** ein (siehe Abbildung).

Hinweis: Stellen Sie die Spannung mit einem Klemmimpuls ein.

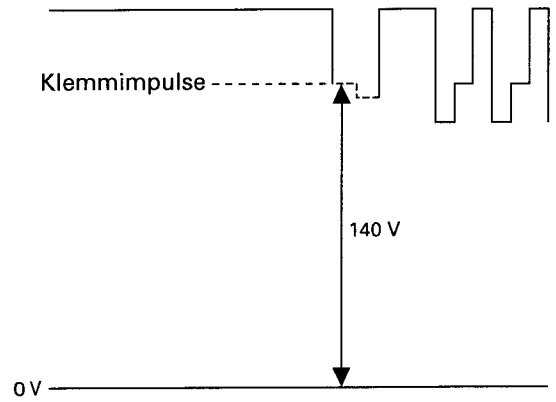

Zurücksetzen der Fernbedienung

1. Entnehmen Sie die Batterien.

2. Setzen Sie die Fernbedienung zurück, indem Sie die blaue Taste etwa 10 Sekunden lang drücken. Setzen Sie dann die Batterien wieder ein.

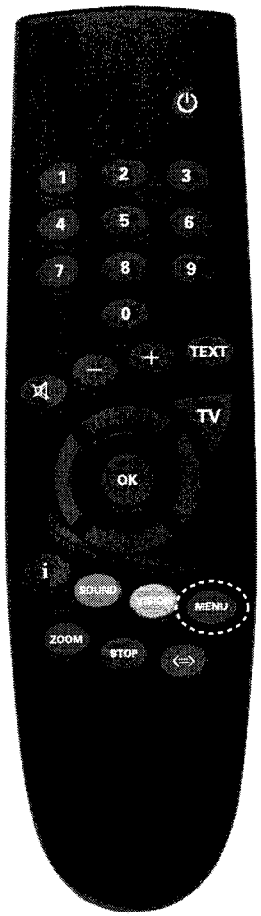

AJ106 Crossover network module (version 9)

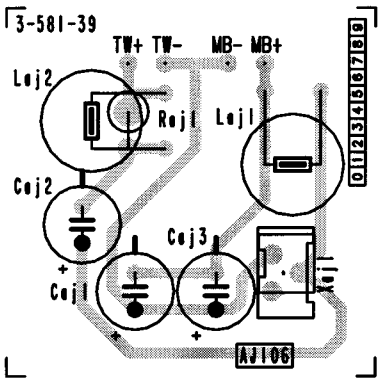

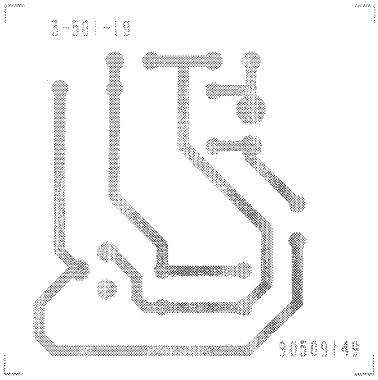

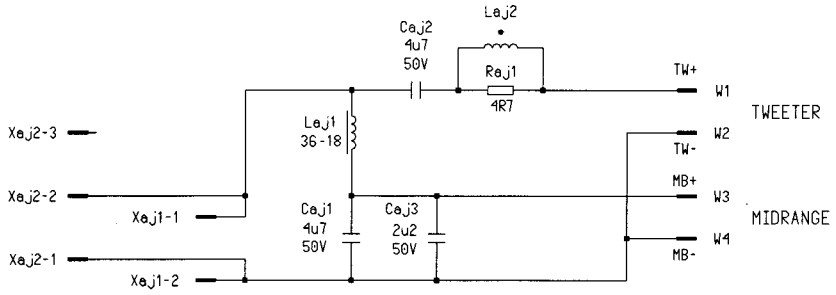

AV163 / AV165 Signal module (version 7)

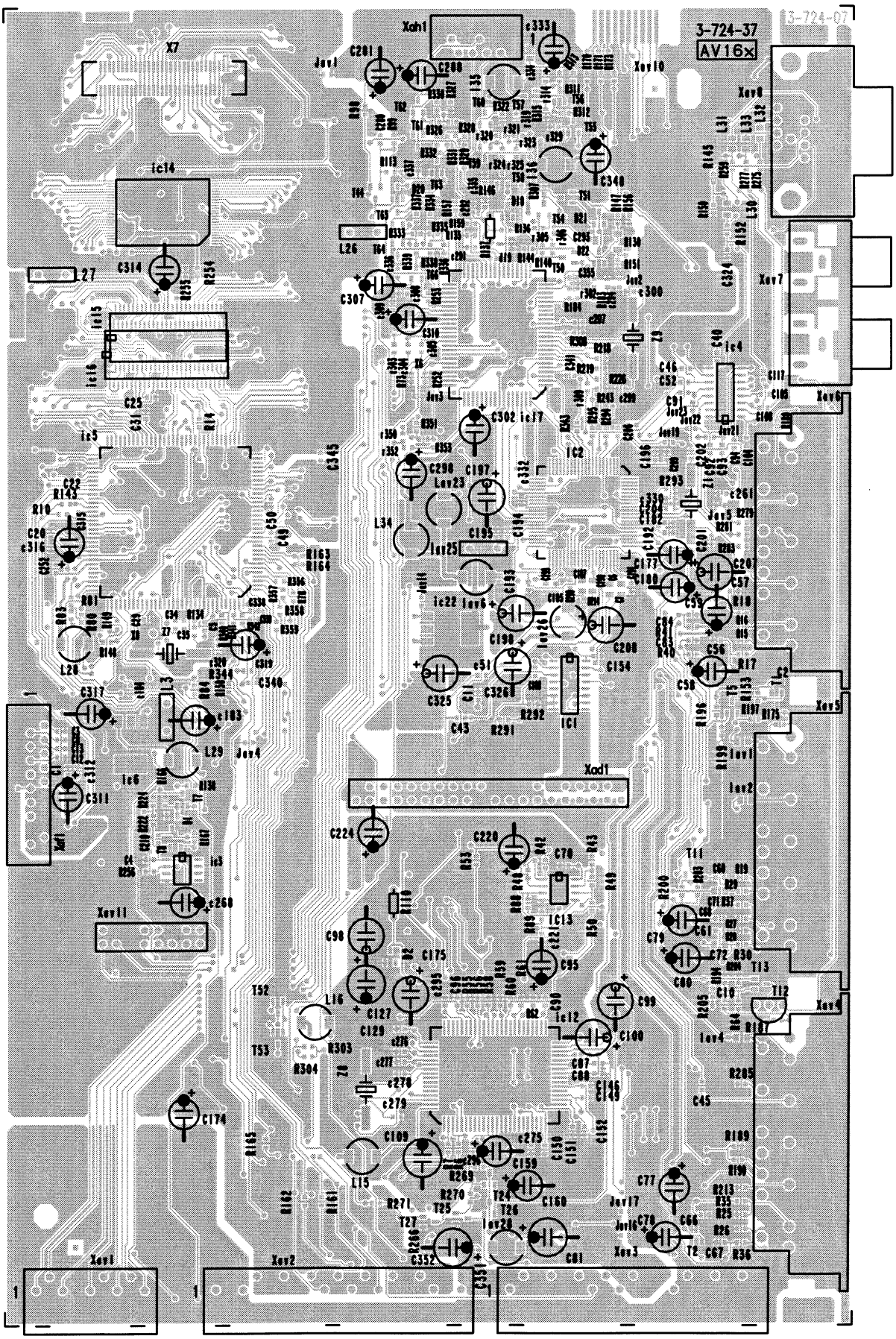

AV163 / AV165 Signal module (version 7)

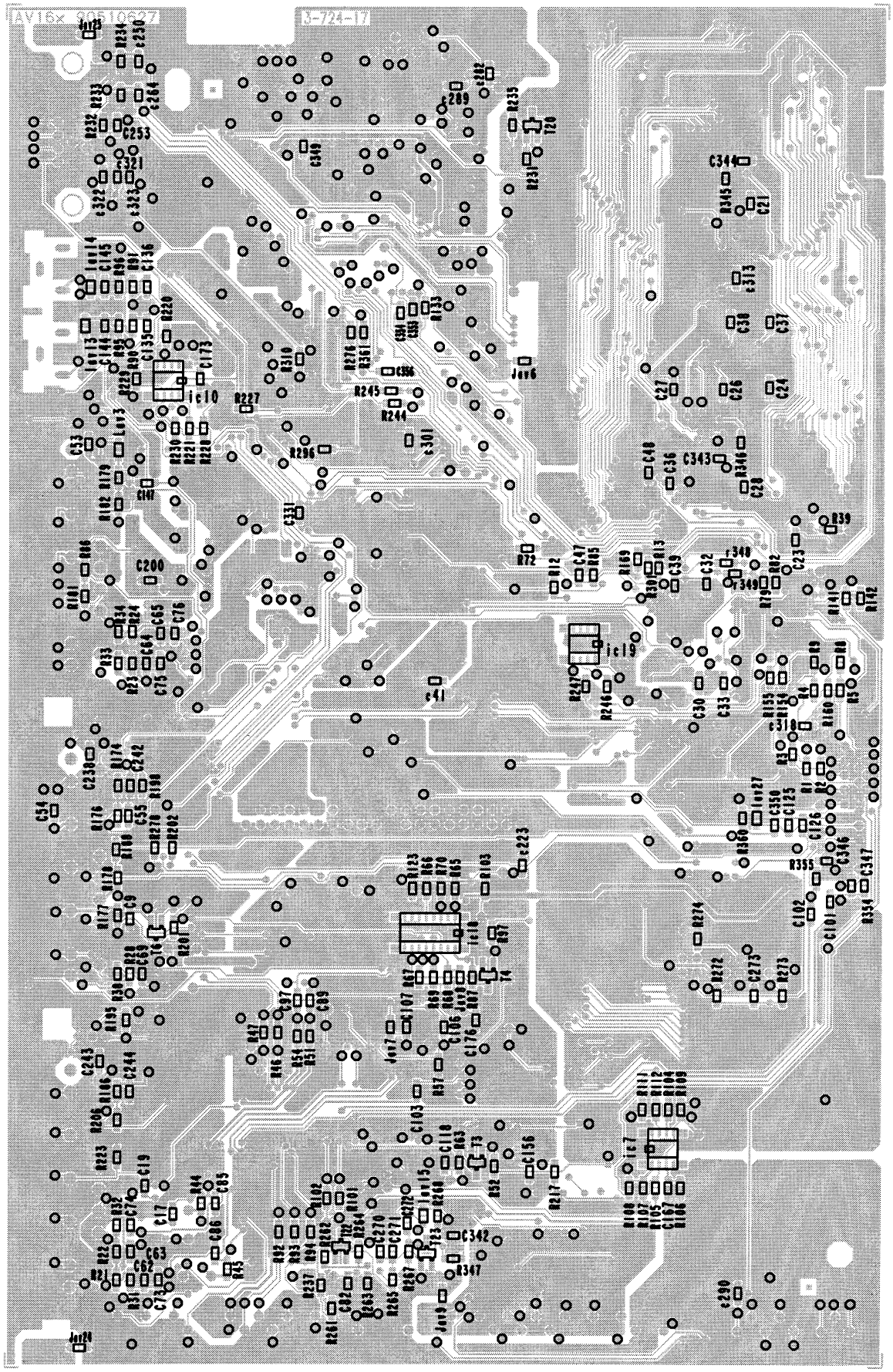

FC110 Control unit module (version 9)

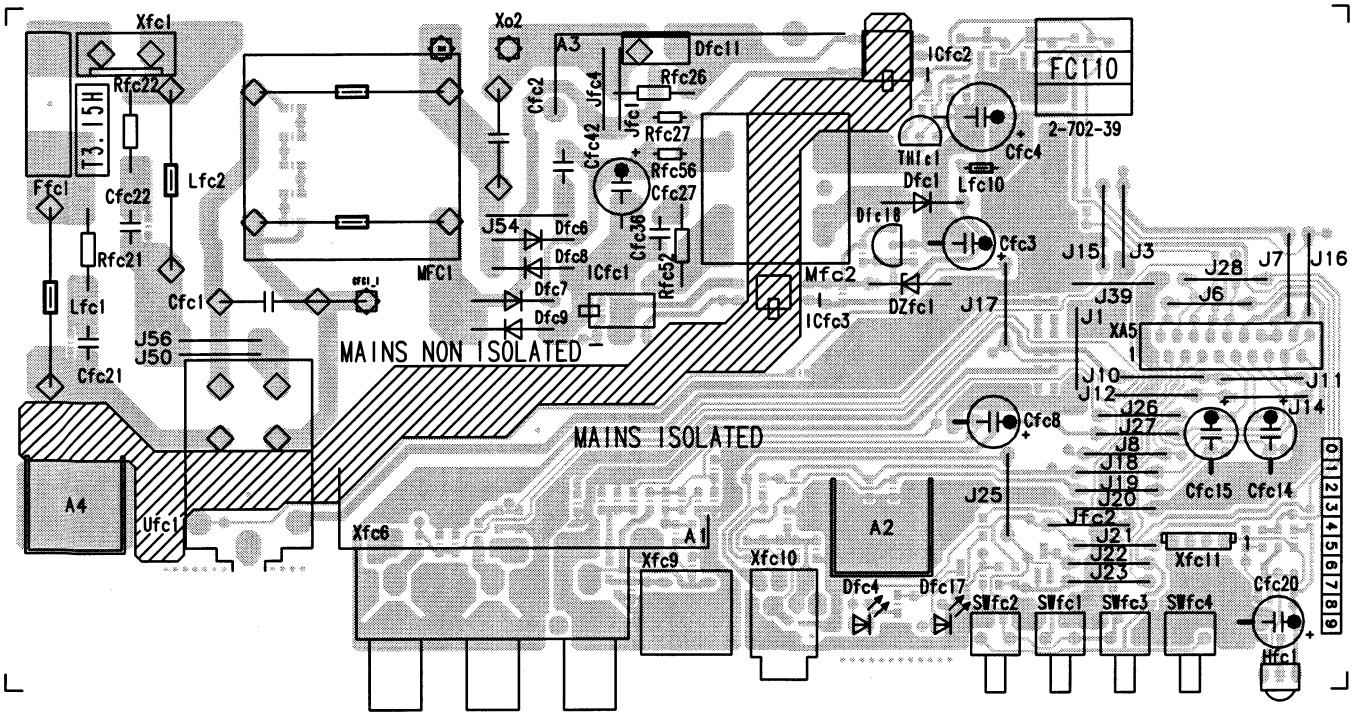

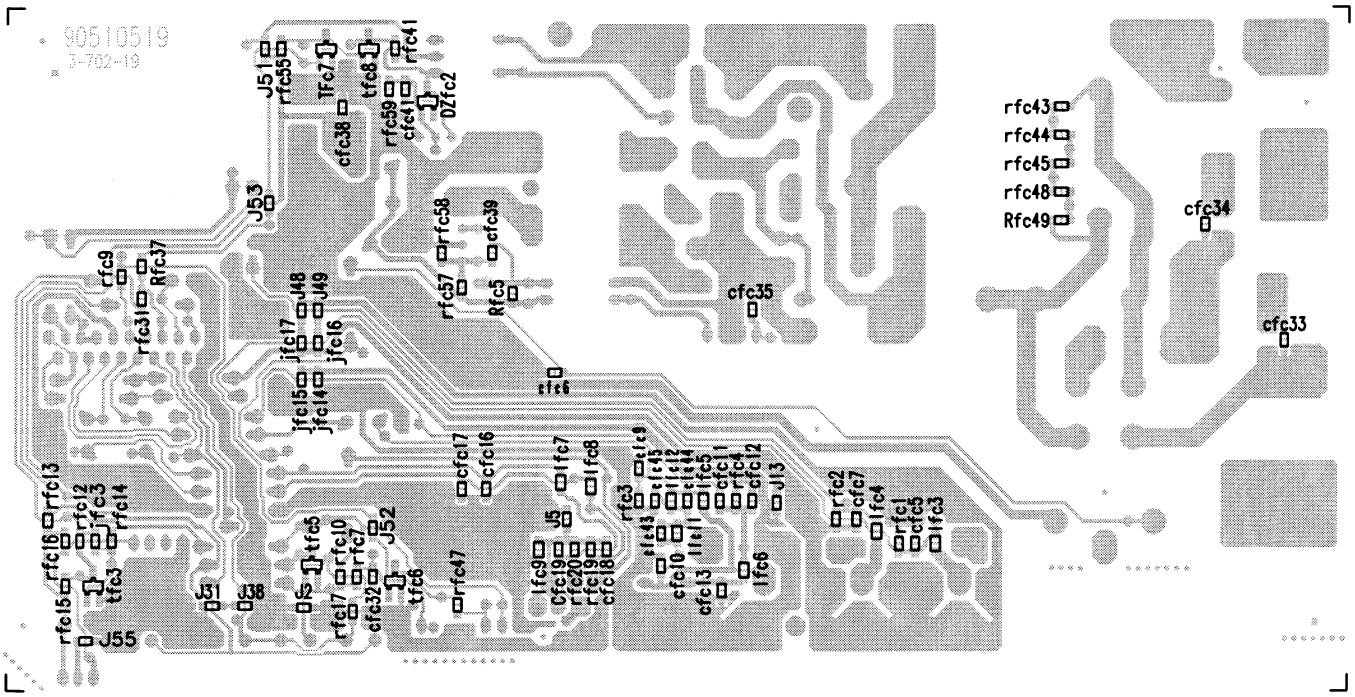

FC110 Control unit module (version 9)

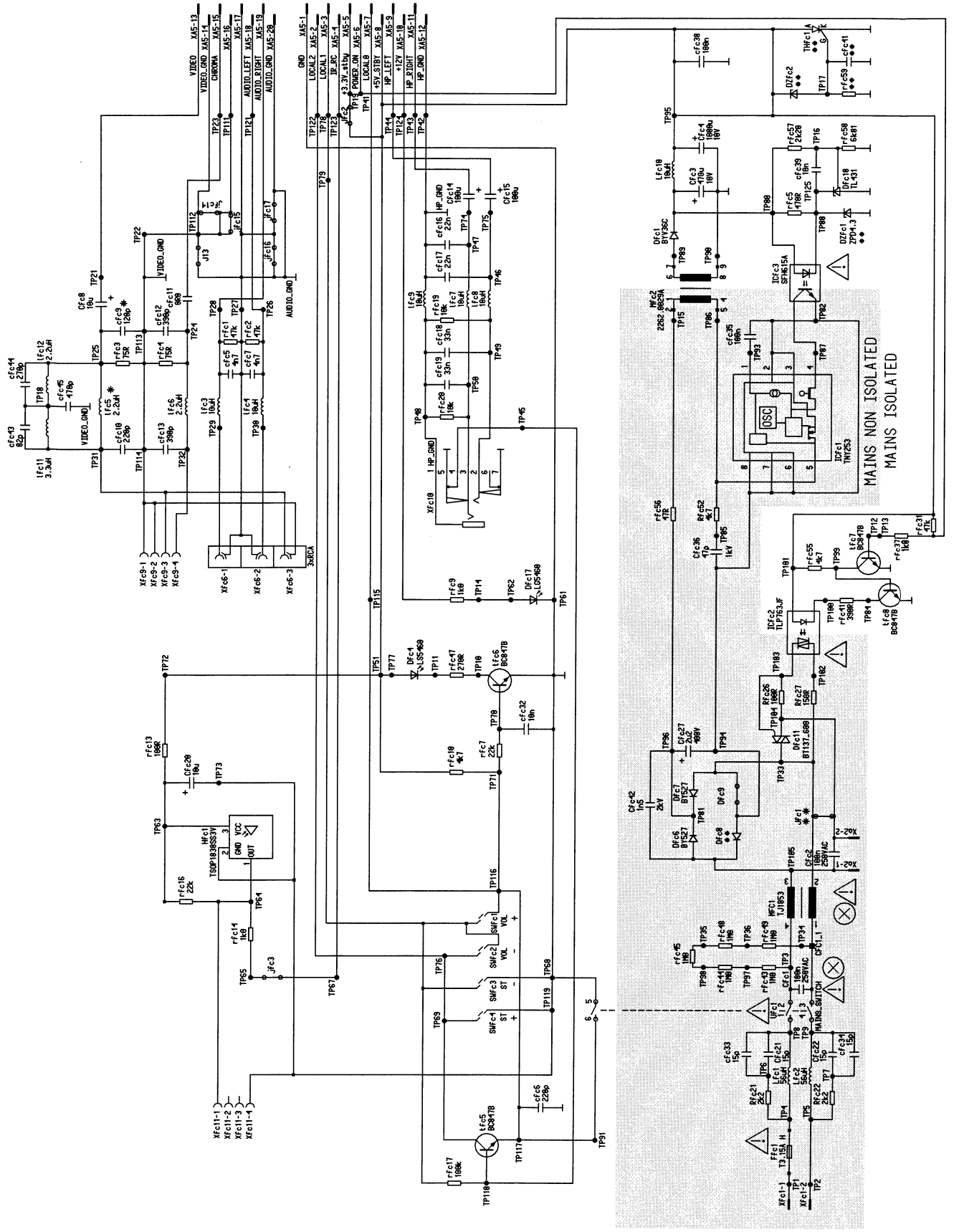

HH201 / HH203 CRT-module (version 8)

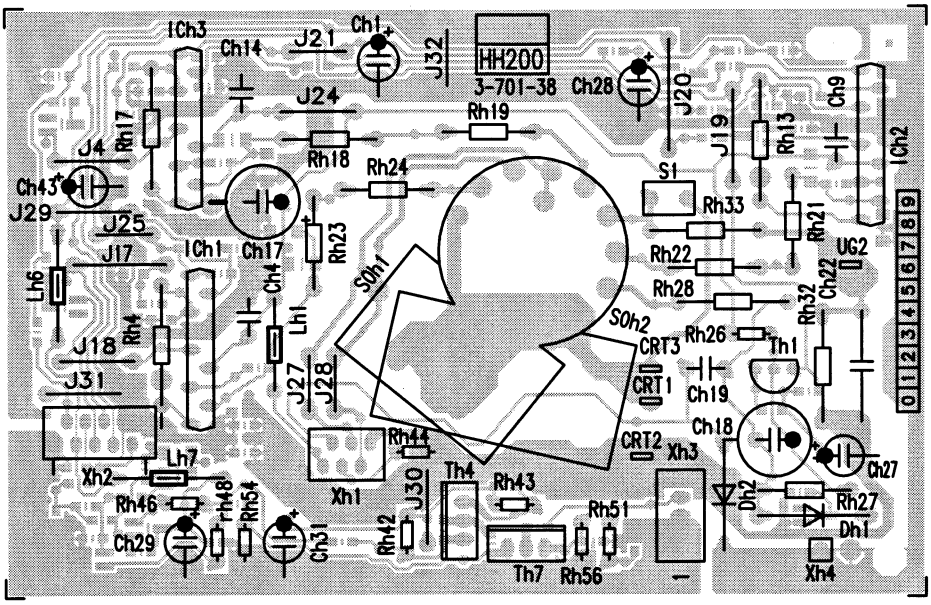

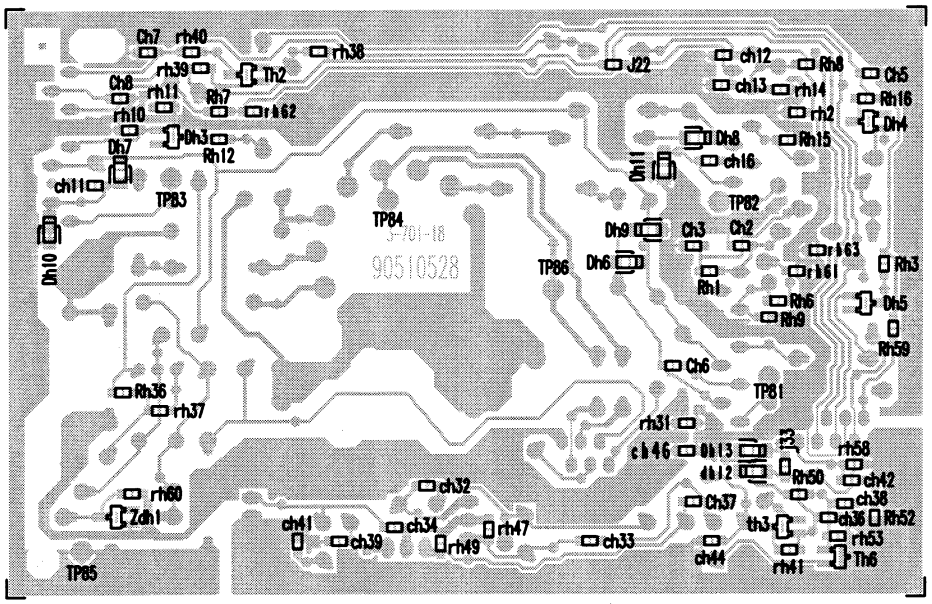

HH201 / HH203 CRT-module (version 8)

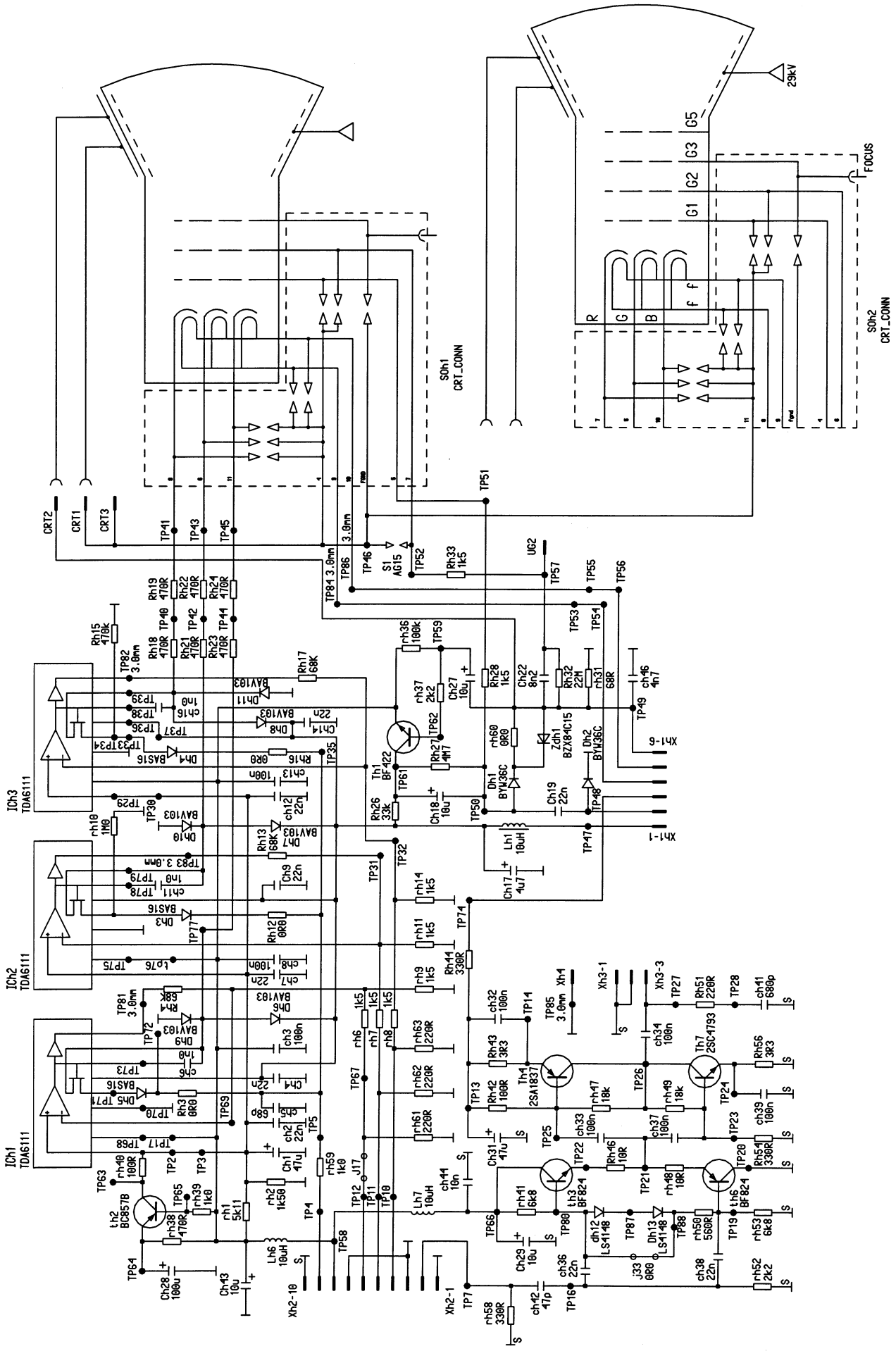

PP160 Picture in picture module (version 2)

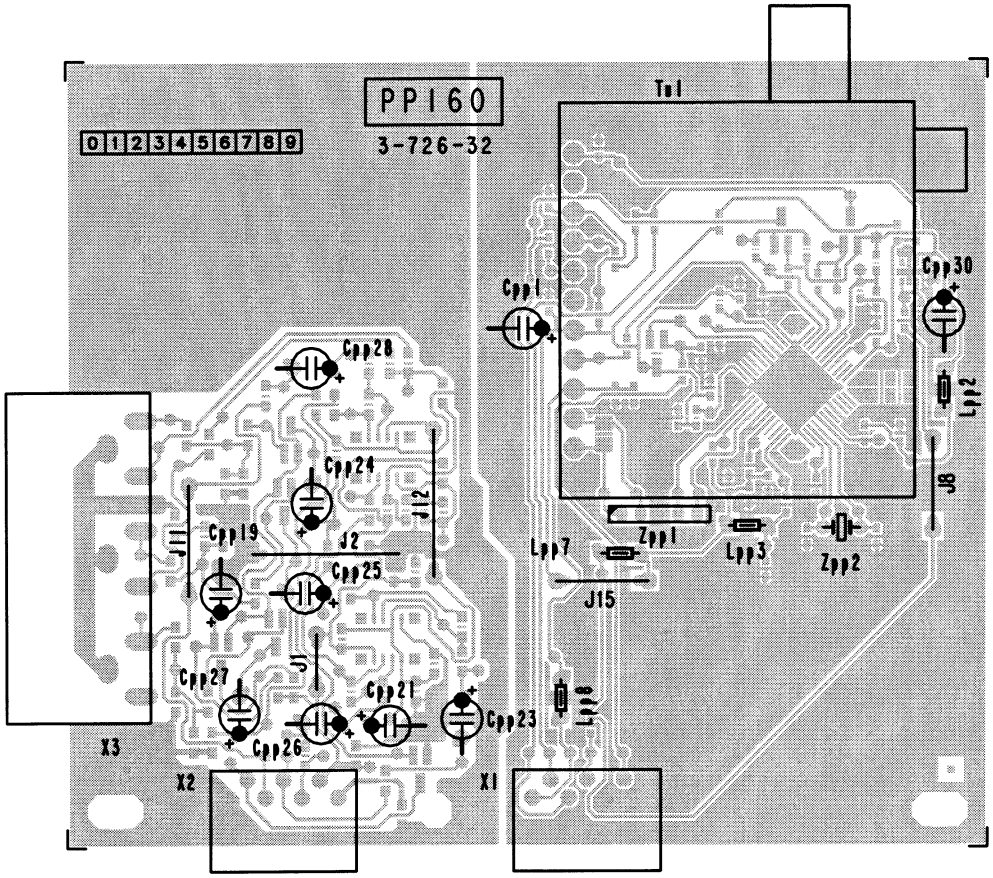

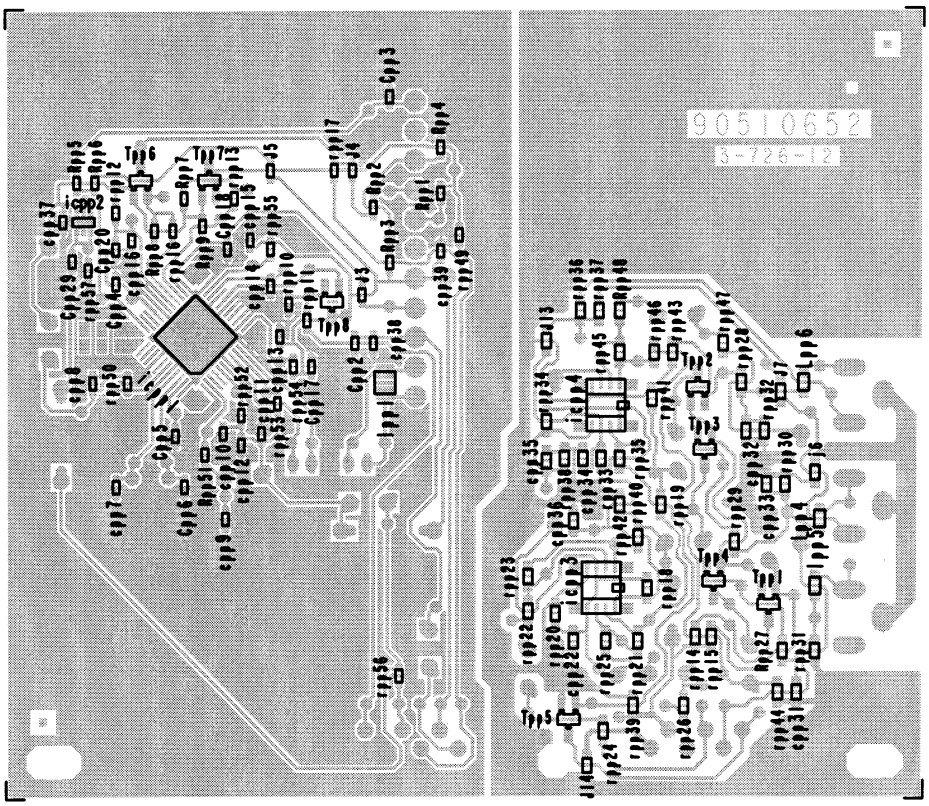

PP160 Picture in picture module (version 2)

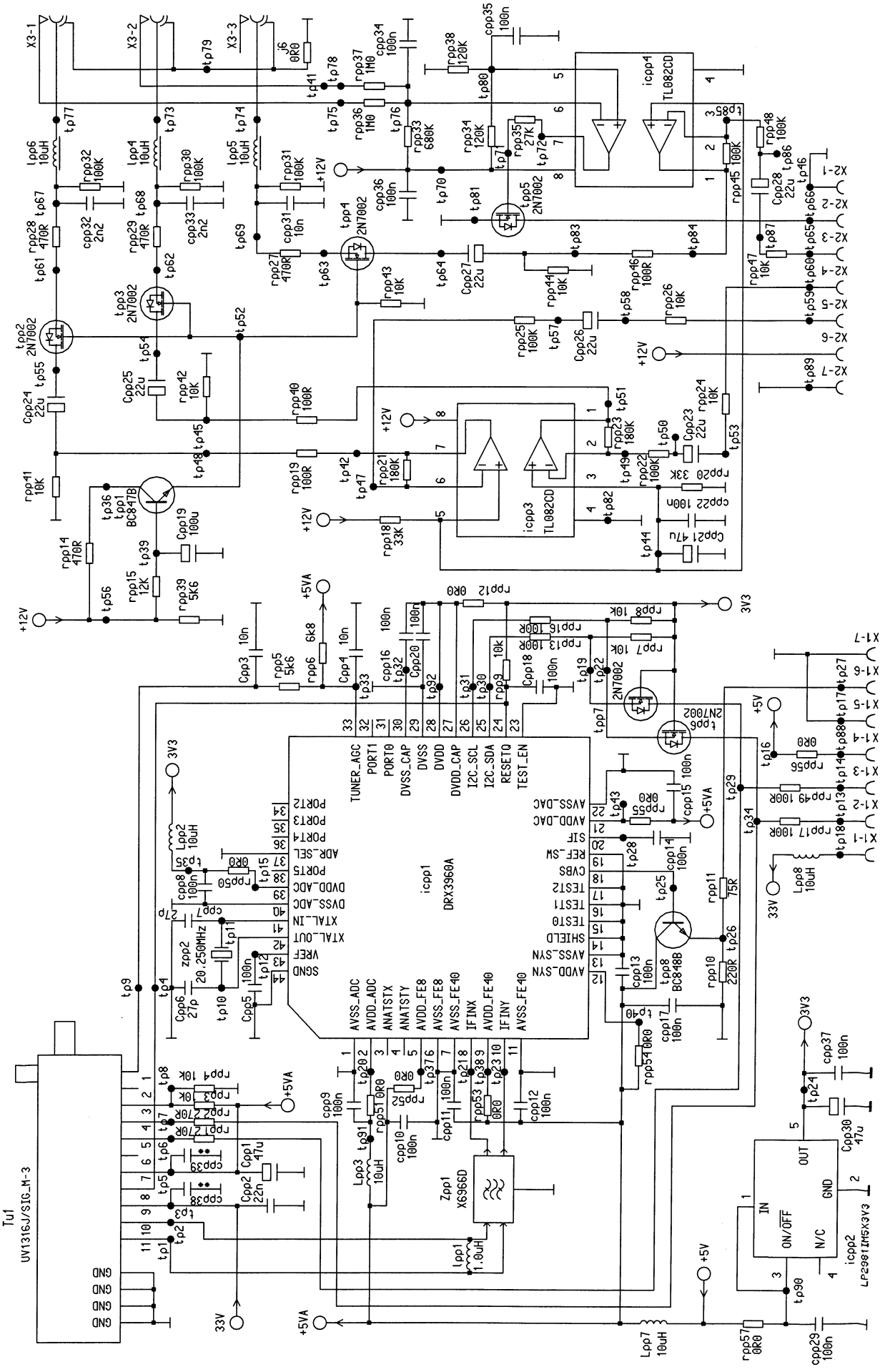

GB Spare parts D Ersatzteile

Note! Hinweis!

⚠ Safety components in accordance with existing safety regulations. These components must be replaced only with original parts.
⚠ Sicherheitsbauteil im Sinn der Sicherheitsbestimmung. Diese Teile dürfen nur durch Originalteile ersetzt werden.

* Version components
* Röhrenabhängige Bauteile

Main board TWARCAA*

Item		Description	Order no.
RESISTORS			
PO	1	R TRIM HOR 2K2 0W1	31110970
RA	2, 23, 24, 25	R SMD 10R 0W10	31425810
RA	3, 4, 5, 8, 9	R SMD 33K 0W10	31425840
RA	6	R SMD 560K 0W10	31425896
RA	7	R SMD 680K 0W10	31490059
RA	10, 16	R SMD 100K 0W10	31425844
RA	11	R SMD 3K9 0W10	31425830
RA	12, 17	R SMD 47K 0W10	31425836
RA	13, 14, 15, 30, 31	R SMD 4K7 0W10	31425824
RA	18⚠	R METOX BK 1R0 4W0	31430013
RA	19	R SMD 10K 0W10	31425833
RA	20	R SMD 1K5 0W10	31425826
RA	21, 22, 26	R SMD 1K0 0W10	31425820
RA	27, 28, 29	R SMD 2K2 0W10	31425828
RK	0	R CARF AX 18K 5% 0W25	31660040
RK	1, 44	R SMD 100R 0W10	31425852
RK	2	R CARF AX 680K 0W25	31660062
RK	3, 5, 10, 12, 56, 57	R SMD 2K7 0W10	31425821
RK	4, 52, 53, 59, 61	R SMD 100K 0W10	31425844
RK	6	R SMD 2K20 0W10	31490098
RK	7, 11, 84, 107	R SMD 10K 0W10	31425833
RK	8, 96	R CARF RAD 15K 5% 0W25	31630033
RK	9	R SMD 430R 0W10	31425879
RK	13	R SMD 3K3 0W10	31425829
RK	15	R SMD 5K1 0W10	31490453
RK	16	R SMD 15K 0W10	31425835
RK	18	R SMD 150R 0W10	31425812
RK	20	R SMD 10R 0W10	31425810
RK	22⚠, 108⚠, 110⚠	R FUS V RAD 2R2 5% 0W25	31860003
RK	23, 25	JUMPER R=15,0 mm	85700150
RK	23-1⚠, 23-2⚠, 25-1⚠, 25-2⚠, 66-1⚠, 66-2⚠	CONN GRIPLET FOR 2-SIDED PCB d=1,9mm	41930009
RK	30⚠	HK-RESISTOR 120R 5%	13100232
RK	31, 33, 38, 39, 42	R SMD 2K00 0W10	31490003
RK	32, 49, 91	R SMD 1K0 0W10	31425820
RK	46, 47	R SMD 820R 0W10	31425819
RK	48	R SMD 470R 0W10	31425817
RK	50	R METOX BK 0R47 1W5	31430011
RK	51, 82, 100	R SMD 2K2 0W10	31425828
RK	54	R SMD 4K7 0W10	31425824
RK	55⚠	R CARF RAD 0R22 5% 0W25	31514506
RK	58	R METOX BK 0R33 1W5	31430010
RK	62	R CARF AX 27R 5% 0W25	31660007
RK	63⚠, 68⚠	R FUS V RD 0R1 0W40	31850059
RK	64⚠	R FUS V RAD 27R 5% 0W25	31860001
RK	65, 67	R CARF RAD 6K8 5% 0W25	31630029
RK	66⚠	R FUS V AX 0R47 5% 0W5	31850004
RK	69	R SMD 1M0 0W10	31425801
RK	70, 77	R CARF RAD 100K 5% 0W25	31630037
RK	72⚠, 73⚠	R FUS V AX 3R0 0W50	31850007
RK	75⚠	R CARF AX 1R5 5% 0W5	31630014
RK	76⚠	R FUS V AX 2R2 0W50	31850056
RK	81	R CARF AX 39K 0W25	31660054
RK	83⚠	R FUS V BLK 390R 10% 1W0	31850002
RK	86, 97	R CARF RAD 8K2 5% 0W25	31630030
RK	99	R SMD 8K2 0W10	31425832
RK	101	R SMD 39K 0W10	31425841
RK	102	R SMD 82K 0W10	31425843
RK	105⚠	R FUS V RD 47R 0W25	31860006
RK	106⚠	R FUS V RD 330R 0W25	31860005
RK	132⚠	R FUS V BLK 100R 10% 1W0	31840002
RK	133	R SMD 0R 0W10	31425802
RO	1⚠	R PTC BLK Rs=9 DUAL FOR DEGAUSSING	31930011
RO	2, 3, 60	R SMD 220K 0W10	31490457
RO	4, 51	R SMD 180K 0W10	31490012
RO	5	R SMD 2K7 0W10	31425821
RO	6, 16	R SMD 24K3 0W10	31490451
RO	8	R SMD 6K8 0W10	31425831
RO	9	R SMD 18K 0W10	31425813
RO	10, 11, 12, 14	R SMD 1M0 0W10	31425801
RO	13, 53	R SMD 10K 0W10	31425833
RO	15, 17	R SMD 12R 0W10	31490058
RO	18, 35	R SMD 2K2 0W10	31425828
RO	24	R SMD 1K0 0W10	31425820
RO	25	R SMD 150R 0W10	31425812
RO	26	R METF AX 1R500W6053	31421362
RO	28	R CARF BLK 560R 0W50 AX	31650003
RO	30	R SMD 1K8 0W10	31425827
RO	32⚠	R METF AX 10M 0W50 HV	31460001
RO	33	R SMD 820R 0W10	31425819
RO	38, 39, 40, 41	R SMD 82R 0W10	31425882
RO	43	R SMD 33K 0W10	31425840
RO	49	R SMD 150K 0W10	31425846
RO	54	R SMD 5K1 0W10	31490453
RO	56	R WRLAC BLK 33K 10% 9W0	31350002
RO	56-1⚠, 56-2⚠, 59-1⚠, 59-2⚠	CONN GRIPLET FOR 2-SIDED PCB d=1,9mm	41930009
RO	58	R SMD 100K 0W10	31425844
RO	59	R WRLAC AX 0R18 2W5	31360046
RO	61	R SMD 470R 0W10	31425817
RO	62	R CARF AX 2K2 0W25	31548618
RQ	1	R SMD 22K 0W10	31425837
RQ	3, 4, 5, 6, 7	R SMD 4K7 0W10	31425824
RQ	12	R SMD 330R 0W10	31425857
RQ	14	R SMD 470R 0W10	31425817
RQ	16	R SMD 1K0 0W10	31425820
RS	1, 19	R SMD 2K2 0W10	31425828
RS	2	R SMD 1K5 0W10	31425826
RS	3	R METF RAD 1R54 1% 0W6	31450012
RS	4	R SMD 270K 0W10	31425805
RS	5, 8	R METF RAD 2R15 0W60	31430281
RS	6	R SMD 4K7 0W10	31425824
RS	7	R SMD 15K 0W10	31425835
RS	9	R CARF RAD 68R 5% 0W25	31630042
RS	10, 11	R SMD 12R 0W10	31490058
RS	20	R CARF RAD 33R 5% 0W25	31630022
RS	21	R SMD 10K 0W10	31425833
RS	22	R SMD 47K 0W10	31425836
RS	23	R SMD 12K1 0W10	31490051
RS	24, 27	R SMD 5K11 0W10	31490454
RS	25, 26	R SMD 6K8 0W10	31425831
RS	29	R SMD 18K 0W10	31425813
RS	30	R SMD 0R 0W10	31425802
CAPACITORS			
CA	1, 2	C (M)KT RAD 220N 63V	33127108
CA	3, 6, 11, 12, 13	C CER2 SMD 100N 25V	32190001
CA	4, 14, 17	C ECAP RAD 22U 35V	34540021
CA	5	C ECAP RAD 1U0 63V	34540022
CA	7	C (M)KT RAD 470N 63V	33124503
CA	8, 9	C CER1 SMD 1N0 50V	32125545
CA	10	C CER2 SMD 150N 16V	32525899
CA	15, 19	C CER2 SMD 100N 50V	32536223
CA	18, 20	C ECAP BLK 3300U 35V	34510009

Item		Description	Order no.
CA	21, 22, 23	C CER2 SMD 22N 50V	32536221
CA	24, 25	C ECAP BLK 470U 35V	34220648
CA	29	C ECAP BLK 1000U 35V	34220554
CK	1	C CER1 SMD 220P 50V	32125513
CK	2, 41	C CER2 SMD 10N 50V	32536213
CK	3, 6	C ECAP RAD 220U 25V	34229784
CK	4	C (M)KT RAD 1U5 63V	33120948
CK	5	C (M)KT RAD 100N 63V	33127106
CK	9	C CER1 SMD 56P 50V	32125526
CK	10, 28	C (M)KT RAD 220N 63V	33127108
CK	12	C ECAP RAD 100U 16V	34223252
CK	13	C CER1 SMD 330P 50V	32125517
CK	14	C ECAP RAD 47U 63V	34540053
CK	15	C ECAP BLK 2200U 25V	34510005
CK	16	C (M)KT RAD 22N 400V	33150965
CK	17⚠, 23⚠	C (M)KC BLK 330N 250V	33660001
CK	18, 24	C (M)KP BLK 470P H 1K6V	33460011
CK	19	C ECAP BLK 4U7 250V HV	34610001
CK	20	C (M)KT BLK 100N 250V	33360003
CK	21	C CER2/3 RAD 2N2 20% 500V	32780003
CK	22	C CER2/3 RAD 330P 10% 500V	32780002
CK	25	C (M)KP BLK 15N H 100V	33460003
CK	26⚠	C (M)KP BLK 11N5 3,5 1K6V	33460019
Ck	26-1⚠, 26-2⚠	CONN GRIPLET	
		FOR 2-SIDED PCB d=1,9mm	41930009
CK	27⚠	C (M)KP BLK 30N 3,5% 630V	33450064
CK	27-1⚠, 27-2⚠	CONN GRIPLET	
		FOR 2-SIDED PCB d=1,9mm	41930009
CK	29⚠	C (M)KP BLK 680N 160V	33460004
CK	29-1⚠, 29-2⚠	CONN GRIPLET	
		FOR 2-SIDED PCB d=1,9mm	41930009
CK	30, 44	C (M)KT RAD 470N 63V	33127123
CK	30-1⚠, 30-2⚠, 36-2⚠, 36-1⚠, 32-1⚠, 32-2⚠, 33-1⚠, 33-2⚠, 17-1⚠, 17-2⚠, 18-1⚠, 18-2⚠, 23-1⚠, 23-2⚠, 24-1⚠, 24-2⚠	CONN GRIPLET	
		FOR 2-SIDED PCB d=1,9mm	41930009
CK	31-1⚠, 31-2⚠, 34-1⚠, 34-2V	CONN GRIPLET	
		FOR 2-SIDED PCB d=1,9mm	41930009
CK	32	C (M)KP BLK 82N 400V	33450077
CK	34⚠	PROPKO 300n 5% 250V	22171302
CK	36	C (M)KP BLK 1N0 1K6V	33460028
CK	37, 42	C CER2 SMD 100N 25V	32190001
CK	38, 39	C ECAP RAD 47U 35V	34229781
CO	1⚠, 4⚠	C CER2/3 BLK 1N0 20% 400VAC Y	32610922
CO	2⚠	C (M)KT BLK 220N 400V	33360002
CO	5, 10, 14, 48	C CER1 SMD 1N0 50V	32125545
CO	6	C CER1 SMD 56P 50V	32125526
CO	7-1⚠, 7-2⚠	CONN GRIPLET	
		FOR 2-SIDED PCB d=1,9mm	41930009
CO	8	C (M)KP RAD 1N0 H 100V	33622914
CO	9	C CER2 SMD 3N3 50V	32536207
CO	11	C CER1 SMD 330P 50V	32125517
CO	12, 50, 51, 52, 55, 56, 63, 65	C CER2 SMD 100N 25V	32190001
CO	13	C ECAP RAD 47U 63V	34540053
CO	19	C ECAP BLK 220U 450V HV	34540102
CO	20	C (M)KT RAD 1U0 63V	33124758
CO	21	C (M)KP BLK 220P 1K6V	33460009
CO	22	C (M)KT BLK 10N 630V	33380023
CO	23⚠	C CER2/3 BLK 1N5 20% 400VAC Y	32960002
CO	24	C CER2/3 RAD 330P 10% 500V Y	32780002
CO	25, 26	C CER2/3 RAD 1N0 10% 500V Y	32780004
CO	29, 54	C (M)KT BLK 100N 250V	33360003
CO	31	C ECAP BLK 2200U 35V	34226678
CO	32	C ECAP BLK 1000U 35V	34510010
CO	33, 39, 40, 41, 42	C (M)KT RAD 100N 63V	33127106
CO	36	C ECAP BLK 220U 250V HV	34610007
CO	43	C ECAP BLK 1000U 16V	34510004
CO	45	C ECAP RAD 10U 63V	34540025
CO	49	C CER2 SMD 10N 50V	32536213
CO	58, 59, 64	C ECAP RAD 100U 16V	34223252
CO	69	C (M)KP BLK 33N 1KV	33460016
CQ	2	C CER1 SMD 1N0 50V	32125545
CQ	4	C ECAP RAD 10U 63V	34540025
CQ	5, 6	C CER2 SMD 100N 25V	32190001
CQ	10	C ECAP RAD 100U 16V	34223252
CS	1	C (M)KT RAD 100N 63V	33127106
CS	2, 6	C CER2 SMD 100N 25V	32190001
CS	3	C (M)KT BLK 47N 100V	33380019
CS	4	C (M)KP RAD 10N 250V	33450057
CS	5	C (M)KT RAD 470N 63V	33127123
CS	7	C ECAP RAD 47U 63V	34540053
CS	8, 10	C CER2 SMD 10N 50V	32536213
CS	9	C CER2 SMD 22N 50V	32536221
CS	11, 12	C CER2 SMD 4N7 50V	32536210
		C CER2 SMD 220N 16V	32525900
		C CER2 SMD 1N0 50V	32535901

TRANSISTORS

TA	1, 2, 4, 5	TR NPN SMD BC847B 45V	36145312
TA	3	TR PNP SMD BC857B 45V	36145412
TK	1, 2, 4, 9	TR PNP SMD BC857B 45V	36145412
TK	3	TR NPN PWR BLK 2SD2012 60V 3A	36270004
TK	3, 12	HEATSINK SPRING	79400021
TK	6, 19, 25	TR NPN SMD BC847B 45V	36145312
TK	8	TR NPN RAD BC637 60V 1A	36220003
TK	10	N-FET PWR BLK BUK457-400B 400V 11A	36370003
TK	11, 15	TR NPN RAD BF422 250V	36125217
TK	12	TR NPN PWR BLK BU2525AF 1K5V 12A	36270003
TK	13	TR PNP RAD BC327-25 45V	36147109
TK	14	TR NPN RAD BC337-25 45V	36147138
TO	1	N-FET BLK STP7NC70Z 700V 6,8A	36370018
TO	1	INSULATOR FOIL FOR 247 1k5V	49000088
TO	1	HEATSINK SPRING	79400021
TO	1-2, 1-3	CONN GRIPLET FOR 2-SIDED PCB d=1,9mm	41930009
TQ	1	TR NPN SMD BC847B 45V	36145312
TS	1, 3	TR NPN SMD BC847B 45V	36145312
TS	5, 6, 7, 8, 9, 10, 2, 4	TR PNP SMD BC857B 45V	36145412

DIODES

DA	1	DI SMD LS4148 75V 200mA	36490002
DK	1, 2, 3, 5, 6, 21	DI SMD LS4148 75V 200mA	36490002
DK	9, 12	DI RECT PWR AX BYV36C 600V 1,6A	36575452
DK	11, 14, 19, 20	DI RECT PWR AX 1N4937 600V 1,0A	36575353
DK	13	DI AX RECT BYT56J 600V 1,5A	36240001
DK	15	DI RECT PWR AX BYV26C 600V 1,0A	36610005
DK	16	DI BK RECT BYM357X DAMPER+MODULATOR22	36621564
DK	16	HEATSINK SPRING	79400021
DK	16-1⚠, 16-2⚠, 16-3⚠	CONN GRIPLET FOR 2-SIDED PCB d=1,9mm	41930009
DO	1, 3, 4, 6	DI RECT PWR AX BY527 1K25V 2A	36610001

Item	Description	Order no.
DO 1-1⚠, 1-2⚠, 2-1⚠, 2-2⚠, 3-1⚠, 3-2⚠, 4-1⚠, 4-2⚠, 6-1⚠, 6-2⚠	CONN GRIPLET FOR 2-SIDED PCB d=1,9mm	41930009
DO 2	DI AX RECT UF5408 1K0V 3,0A	36621568
DO 2	DIODE COOLING PLATE	81402597
DO 7-1⚠, 7-2⚠	CONN GRIPLET FOR 2-SIDED PCB d=1,9mm	41930009
DO 9, 21	DI SMD LS4148 75V 200mA	36490002
DO 14	DI SMD BAS20 150V 200mA	36560320
DO 16-1⚠, 16-2⚠, 22-1⚠, 22-2⚠, 26-1⚠, 26-2⚠	CONN GRIPLET FOR 2-SIDED PCB d=1,9mm	41930009
DO 17, 18	DI RECT AX BYW98 200V 3A	36575470
DO 19	IC VREF TL431CLP	37410012
DO 26	DI AX SCHT SB560 60V 5,0A	36420005
DO 27	DI RECT PWR AX BA158 600V 0,5A	36561010
DO 27-1⚠, 27-2⚠	CONN GRIPLET FOR 2-SIDED PCB d=1,9mm	41930009
DS 1	DI SMD LS4148 75V 200mA	36490002

ZENERS

ZDA 2	Z DIODE SMD BZX84A 12V	36770019
ZDK 1	Z DIODE AX BZX55B 18V	36770008
ZDK 3, 10	Z DIODE SMD BZX84B 12V	36780008
ZDK 4	Z DIODE SMD BZX84C 51V	36770035
ZDK 5, 11	Z DIODE SMD BZX84C 2V4	36780005
ZDO 1, 11	Z DIODE SMD BZX84B 12V	36780008
ZDQ 1	Z DIODE SMD BZX84B 30V	36770033

INTEGRATED CIRCUITS

ICA 1, 2	IC AUDIO TDA2616 12+12W	37631259
ICA 1, 2	HEATSINK SPRING	79400021
ICO 1	IC PWR CONT TDA16846	37450019
ICO 3⚠	IC OPTO COUPL SFH615A-2	36950009
ICO 5	IC V-REG PQ05RH11 5V 1,5A	37460008
ICO 5, 8, 11	HEATSINK SPRING	79400021
ICO 8	IC V-REG PQ3RD13 3V3 1,0A	37460033
ICO 11	IC V-REG L7812CV 12V 1,5A	37681748
ICS 1	IC DEFL TDA8354Q/N1I/N1E S1	37450017
ICS 1	HEATSINK SPRING	79400021

FUSES

FO 1⚠	FUSE F2,5A MINIATURE D=8,5	43770004
FO 1-1⚠, 1-2⚠	CONN GRIPLET FOR 2-SIDED PCB d=1,9mm	41930009
FO 2⚠, 7⚠, 8⚠	FUSE T2,0A MINIATURE D=8,5	43770005

TRANSFORMERS

TRK 1	TRAFO 545 01 204 00	45380013
TRK 2⚠	DST TRAFO 1372,8016A	45360089
TRK 2-5⚠, 2-7⚠, 2-9⚠, 2-10⚠, 2-13⚠	CONN GRIPLET FOR 2-SIDED PCB d=1,9mm	41930009
TRK 2-16⚠, 2-1⚠, 2-2⚠	CONN GRIPLET FOR 2-SIDED PCB d=1,9mm	41930009
TRK 3	TRAFO AT4043/67A FOR DYN. FOCUS	45380018
TRK 3-1⚠, 3-3⚠, 3-4⚠, 3-6⚠, 5-1⚠, 5-3⚠, 5-4⚠, 5-6⚠	CONN GRIPLET FOR 2-SIDED PCB d=1,9mm	41930009
TRO 2⚠	MAINS TRAFO 2322.0019B	45320063
TRO 2-10⚠, 2-19⚠, 2-21⚠, 2-22⚠	CONN GRIPLET FOR 2-SIDED PCB d=1,9mm	41930009

COILS

TRK 5⚠	COIL BLK RAD 68uH 15% E/W	45380024
LK 1	COIL LIN BLK EKM12-136	45161283
LK 1-1⚠, 1-2⚠	CONN GRIPLET FOR 2-SIDED PCB d=1,9mm	41930009
LK 1-3⚠, 1-4⚠, 2-1⚠, 2-2⚠, 5-1⚠, 5-2⚠, 6-1⚠, 6-2⚠	CONN GRIPLET FOR 2-SIDED PCB d=1,9mm	41930009
LK 2	COIL BLK 280uH FJ1311	45610004
LK 3	COIL BLK 1,9mH 14R DRM0630192010K-01	45610018
LK 4	EMI SUPPRES BEAD 3,5x9	45620007
LK 5	COIL BLK 47uH 7% 1,7A RAD	45620035
LK 6	COIL BLK 33uH 7% 1,9A RAD	45620037
LK 7	COIL BLK 33mH 5780301100	45610022
LO 3, 14, 15, 16	EMI SUPPRES BEAD 3,5x9	45620007
LO 5, 7	COIL BLK 10uH 1200mA RAD	45571699
LO 10	COIL AX 10uH 1200mA	45571698
LO 13⚠	COIL BLK 43mH 1,2A 250V	45390025
LO 13-2⚠, 13-3⚠, 13-7⚠, 13-10⚠, 13-12⚠, 14-1⚠, 14-2⚠, 15-1⚠, 15-2⚠, 17-1⚠, 17-3⚠, 17-4⚠, 17-6⚠, 17-7⚠, 17-12⚠	CONN GRIPLET FOR 2-SIDED PCB d=1,9mm	41930009
LQ 1	COIL BLK 10uH 1200mA RAD	45571699

OTHERS

HCK 17_1-1⚠, 23_1-1⚠	CONN GRIPLET FOR 2-SIDED PCB d=1,9mm	41930009
HCK 29-1⚠, 29_1-1⚠	CONN GRIPLET FOR 2-SIDED PCB d=1,9mm	41930009
HCK 34-1⚠	CONN GRIPLET FOR 2-SIDED PCB d=1,9mm	41930009
HXKT 1-1⚠, 2-1⚠, 3-1⚠, 4-1⚠, 7-1⚠, 8-1⚠, 9-1⚠	CONN GRIPLET FOR 2-SIDED PCB d=1,9mm	41930009
J 4, 45, 54, 61, 89, 121, 131, 137, 138, 151, 166, 173, 185, 193, 195, 200, 211, 219, 324, 327, 329, 331, 332	JUMPER R=15,0 mm	85700150
J 6, 8, 55, 73, 81, 92, 113, 114, 123, 139, 140, 169, 188, 191, 213, 216, 338	JUMPER R=17,5 mm	85700175

Item		Description	Order no.
J	12, 19, 21, 22, 23, 25, 39, 40, 41, 42, 43, 44, 50, 57, 60, 71, 76, 83, 84, 96, 158, 161, 167, 180, 187, 204, 207, 218, 302, 306, 311, 312, 313, 315, 317, 318, 339	JUMPER R=12,5 mm	85700125
J	15, 49, 51, 53, 67, 68, 74, 75, 77, 98, 124, 134, 148, 164, 178, 181, 186, 199, 201, 217, 304, 330, 342	JUMPER R=20,0 mm	85700200
J	33, 301, 319, 335, 340, 341, 344	R SMD 0R 0W10	31425802
J	93, 100, 103, 108, 142, 146, 147, 163, 179, 194, 206, 208, 210, 212, 215, 303, 305, 308	JUMPER R=10,0 mm	85700100
J	145	JUMPER R=11,25 mm	85701125
J	194-1⚠, 194-2⚠, 195-1⚠, 195-2⚠, 200-1⚠, 200-2⚠, 202-1⚠, 202-2⚠, 315-1⚠, 315-2⚠	CONN GRIPLET FOR 2-SIDED PCB d=1,9mm	41930009
J	307, 314, 328	JUMPER R= 7,5 mm	85700075
JQ	10	R SMD 0R 0W10	31425802
TU	1	TUNER FQ1216ME/I V-3	58231067
XA	1	ROW CONN 3-PIN VERT	73190603
XA	2	ROW CONN 4-PIN VERT	73190604
XAV	1	CONN ROW 9-PIN VERT	41710068
XAV	2, 3	CONN ROW 19-PIN VERT	41710073
XK	3	ROW CONN 5-PIN VERT	41710001
XK	3-1⚠, 3-2⚠, 3-3⚠, 3-4⚠, 3-5⚠, 7-1⚠, 7-2⚠	CONN GRIPLET FOR 2-SIDED PCB d=1,9mm	41930009
XK	6	CONN HEADER 6-PIN PITCH	41710002
XKT	1	BLADE CONN 2,8MM FOR PCB MALE	41930001
XO	1	ROW CONN 2-PIN VERT LOCK	73184750
XO	1-1, 1-2	CONN GRIPLET FOR 2-SIDED PCB d=1,9mm	41930009
XO	3	CONN ROW 2-PIN VERT	41710212
XS	1	ROW CONN 3-PIN VERT	73190603
XS	2	ROW CONN 4-PIN VERT	73190604
XT	1, 2	CONN ROW 7-PIN VERT	41710077
		INS SLEEVE FOR CONN BLADE 2,8mm	47310004
		ANTENNA CABLE ASSY 200mm RCA/IEC	47780009
	⚠	CABLE ANODE A113817 630mm+CHIMNEY CAP	96008869
	⚠	FOCUS CABLE 410mm	96010220
	⚠	FOCUS CABLE 1,2 410MM	96010230
	⚠	SCREEN CABLE 460mm	96010244

Item		Description	Order no.
Main board TNBRAAA*			
RESISTORS			
PK	1⚠	R POT FOCUS 59M 2W0	31280010
PO	1	R TRIM HOR 2K2 0W1	31110970
RA	13, 14, 30, 31	R SMD 4K7 0W10	31425824
RA	18⚠	R METOX BK 1R0 4W0	31430013
RA	19	R SMD 10K 0W10	31425833
RA	22	R SMD 1K0 0W10	31425820
RA	24, 25	R SMD 10R 0W10	31425810
RA	27, 28	R SMD 2K2 0W10	31425828
RK	0	R CARF AX 150K 5% 0W25	31660032
RK	1, 44	R SMD 100R 0W10	31425852
RK	3, 5, 10, 12, 56, 57	R SMD 2K7 0W10	31425821
RK	4, 52, 53, 59, 61	R SMD 100K 0W10	31425844
RK	6	R SMD 2K20 0W10	31490098
RK	7, 11, 84, 133	R SMD 10K 0W10	31425833
RK	8	R CARF RAD 15K 5% 0W25	31630033
RK	9	R SMD 430R 0W10	31425879
RK	13	R SMD 3K3 0W10	31425829
RK	15	R SMD 5K1 0W10	31490453
RK	16	R SMD 15K 0W10	31425835
RK	18	R SMD 150R 0W10	31425812
RK	20	R SMD 10R 0W10	31425810
RK	22⚠	R FUS V RAD 2R2 5% 0W25	31860003
RK	23, 25	JUMPER R=15,0 mm	85700150
RK	23-1⚠, 23-2⚠, 25-1⚠, 25-2⚠, 66-1⚠, 66-2⚠	CONN GRIPLET FOR 2-SIDED PCB d=1.9mm	41930009
RK	30⚠	HK-RESISTOR 120R 5%LCR0207	13100232
RK	31, 33, 38, 39, 42	R SMD 2K00 0W10	31490003
RK	32, 49	R SMD 1K0 0W10	31425820
RK	46, 47	R SMD 820R 0W10	31425819
RK	48	R SMD 470R 0W10	31425817
RK	50	R METOX BK 0R47 1W5	31430011
RK	51, 82	R SMD 2K2 0W10	31425828
RK	54	R SMD 4K7 0W10	31425824
RK	55⚠	R CARF RAD 0R22 5% 0W25	31514506
RK	58	R METOX BK 0R33 1W5	31430010
RK	62	R CARF AX 27R 5% 0W25	31660007
RK	63⚠, 68⚠	R FUS V RD 0R1 0W40	31850059
RK	64⚠	R FUS V RAD 27R 5% 0W25	31860001
RK	65, 67	R CARF RAD 6K8 5% 0W25	31630029
RK	66⚠	R FUS V AX 0R47 5% 0W5	31850004
RK	69	R SMD 1M0 0W10	31425801
RK	70, 77	R CARF RAD 100K 5% 0W25	31630037
RK	72⚠, 73⚠	R FUS V AX 3R0 0W50	31850007
RK	75⚠	R CARF AX 1R5 5% 0W5	31630014
RK	76⚠	R FUS V AX 2R2 0W50	31850056
RK	81	R CARF AX 39K 0W25	31650054
RK	83⚠	R FUS V BLK 390R 10% 1W0	31850002
RO	1⚠	R PTC BLK Rs=9 DUAL FOR DEGAUSSING	31930011
RO	2, 3, 60	R SMD 220K 0W10	31490457
RO	4, 51	R SMD 180K 0W10	31490012
RO	5	R SMD 2K7 0W10	31425821
RO	6, 16	R SMD 24K3 0W10	31490451
RO	8	R SMD 6K8 0W10	31425831
RO	9	R SMD 18K 0W10	31425813
RO	10, 11, 12, 14	R SMD 1M0 0W10	31425801
RO	13, 53	R SMD 10K 0W10	31425833
RO	15, 17	R SMD 12R 0W10	31490058
RO	18, 35	R SMD 2K2 0W10	31425828
RO	24	R SMD 1K0 0W10	31425820
RO	25	R SMD 150R 0W10	31425812
RO	26	R METF AX 1R500W6053	31421362
RO	28	R CARF BLK 560R 0W50 AX	31650003
RO	30	R SMD 1K8 0W10	31425827
RO	32⚠	R METF AX 10M 0W50 HV	31460001
RO	33	R SMD 820R 0W10	31425819

Item		Description	Order no.
RO	38, 39, 40, 41	R SMD 82R 0W10	31425882
RO	43	R SMD 33K 0W10	31425840
RO	49	R SMD 150K 0W10	31425846
RO	54	R SMD 5K1 0W10	31490453
RO	56	R WRLAC BLK 33K 10% 9W0	31350002
RO	56-1⚠, 56-2⚠, 59-1⚠, 59-2⚠	CONN GRIPLET FOR 2-SIDED PCB d=1.9mm	41930009
RO	58	R SMD 100K 0W10	31425844
RO	59	R WRLAC AX 0R18 2W5	31360046
RO	61	R SMD 470R 0W10	31425817
RO	62	R CARF AX 2K2 0W25	31548618
RQ	1	R SMD 22K 0W10	31425837
RQ	3, 4, 5, 6, 7	R SMD 4K7 0W10	31425824
RQ	12	R SMD 330R 0W10	31425857
RQ	14	R SMD 470R 0W10	31425817
RQ	16	R SMD 1K0 0W10	31425820
RS	1	R SMD 2K2 0W10	31425828
RS	2	R SMD 1K5 0W10	31425826
RS	3	R METF RAD 1R54 1% 0W6	31450012
RS	4	R SMD 270K 0W10	31425805
RS	5, 8	R METF RAD 1R10 0W60	31450013
RS	9	R CARF RAD 27R 5% 0W25	31630021
RS	10, 11	R SMD 12R 0W10	31490058
RS	13, 14, 15	R CARF RAD 820R 5% 0W25	31630044
RS	21	R SMD 10K 0W10	31425833
RS	22	R SMD 47K 0W10	31425836
RS	23	R SMD 12K1 0W10	31490051
RS	24, 27	R SMD 5K11 0W10	31490454
RS	25, 26	R SMD 6K8 0W10	31425831

CAPACITORS

CA	1, 2	C (M)KT RAD 220N 63V	33127108
CA	8, 9	C CER1 SMD 1N0 50V	32125545
CA	13	C CER2 SMD 100N 25V	32190001
CA	17	C ECAP RAD 22U 35V	34540021
CA	18, 20	C ECAP BLK 3300U 35V	34510009
CA	19	C CER2 SMD 100N 50V	32536223
CA	21, 22	C CER2 SMD 22N 50V	32536221
CA	24, 25	C ECAP BLK 470U 35V	34220648
CK	1	C CER1 SMD 220P 50V	32125513
CK	2, 41	C CER2 SMD 10N 50V	32536213
CK	3, 6	C ECAP RAD 220U 25V	34229784
CK	4	C (M)KT RAD 1U5 63V	33120948
CK	5	C (M)KT RAD 100N 63V	33127106
CK	9	C CER1 SMD 56P 50V	32125526
CK	10, 28	C (M)KT RAD 220N 63V	33127108
CK	12	C ECAP RAD 100U 16V	34223252
CK	13	C CER1 SMD 330P 50V	32125517
CK	14	C ECAP RAD 47U 63V	34540053
CK	15	C ECAP BLK 2200U 25V	34510005
CK	16	C (M)KT RAD 22N 400V	33150965
CK	17⚠, 23⚠	C (M)KC BLK 330N 250V	33660001
CK	18	C (M)KP BLK 820P 1K5V	33450039
CK	19	C ECAP BLK 4U7 250V HV	34610001
CK	20	C (M)KT BLK 100N 250V	33360003
CK	21	C CER2/3 RAD 2N2 20% 500V	32780003
CK	22	C CER2/3 RAD 330P 10% 500V Y	32780002
CK	24	C (M)KP BLK 470P H 1K6V	33460011
CK	25	C (M)KP BLK 15N H 100V	33460003
CK	26⚠	C (M)KP BLK 10N 1K6V	33450037
CK	26-1⚠, 26-2⚠	CONN GRIPLET FOR 2-SIDED PCB d=1.9mm	41930009
CK	27⚠	C (M)KP BLK 30N 3,5% 630V	33450064
CK	27-1⚠, 27-2⚠	CONN GRIPLET FOR 2-SIDED PCB d=1.9mm	41930009
CK	29⚠	C (M)KP BLK 560N 250V	33460021
Ck	29-1⚠, 29-2⚠	CONN GRIPLET FOR 2-SIDED PCB d=1.9mm	41930009
CK	30, 44	C (M)KT RAD 470N 63V	33127123
CK	30-1⚠, 30-2⚠	CONN GRIPLET FOR 2-SIDED PCB d=1.9mm	41930009
CK	31-1⚠, 31-2⚠, 34-1⚠, 34-2⚠	CONN GRIPLET FOR 2-SIDED PCB d=1.9mm	41930009
CK	32⚠, 33⚠	C (M)KP BLK 56N 400V	33450061
CK	34⚠	PROPKO 300n 5% 250V MKP10	22171302
CK	36-1⚠, 36-2⚠, 32-1⚠, 32-2⚠, 33-1⚠, 33-2⚠, 17-1⚠, 17-2⚠, 18-1⚠, 18-2⚠, 23-1⚠, 23-2⚠, 24-1⚠, 24-2⚠	CONN GRIPLET FOR 2-SIDED PCB d=1.9mm	41930009
CO	1⚠, 4⚠	C CER2/3 BLK 1N0 20% 400VAC Y	32610922
CO	2⚠	C (M)KT BLK 220N 400V	33360002
CO	5, 10, 14, 48	C CER1 SMD 1N0 50V	32125545
CO	6	C CER1 SMD 56P 50V	32125526
CO	7-1⚠, 7-2⚠	CONN GRIPLET FOR 2-SIDED PCB d=1.9mm	41930009
CO	8	C (M)KP RAD 1N0 H 100V	33622914
CO	9	C CER2 SMD 3N3 50V	32536207
CO	11	C CER1 SMD 330P 50V	32125517
CO	12, 50, 51, 52, 55, 56, 63, 65	C CER2 SMD 100N 25V	32190001
CO	13	C ECAP RAD 47U 63V	34540053
CO	19	C ECAP BLK 220U 450V HV	34540102
CO	20	C (M)KT RAD 1U0 63V	33124758
CO	21	C (M)KP BLK 220P 1K6V	33460009
CO	22	C (M)KT BLK 10N 630V	33380023
CO	23⚠	C CER2/3 BLK 1N5 20% 400VAC Y	32960002
CO	24	C CER2/3 RAD 330P 10% 500V Y	32780002
CO	25, 26	C CER2/3 RAD 1N0 10% 500V Y	32780004
CO	29, 54	C (M)KT BLK 100N 250V	33360003
CO	31	C ECAP BLK 2200U 35V	34226678
CO	32	C ECAP BLK 1000U 35V	34510010
CO	33, 39, 40, 41, 42	C (M)KT RAD 100N 63V	33127106
CO	36	C ECAP BLK 220U 250V HV	34610007
CO	43	C ECAP BLK 1000U 16V	34510004
CO	45	C ECAP RAD 10U 63V	34540025
CO	49	C CER2 SMD 10N 50V	32536213
CO	58, 59, 64	C ECAP RAD 100U 16V	34223252
CO	69	C (M)KP BLK 33N 1KV	33460016
CQ	2	C CER1 SMD 1N0 50V	32125545
CQ	4	C ECAP RAD 10U 63V	34540025
CQ	5, 6	C CER2 SMD 100N 25V	32190001
CQ	10	C ECAP RAD 100U 16V	34223252
CS	1	C (M)KT RAD 100N 63V	33127106
CS	3	C (M)KT BLK 47N 100V	33380019
CS	4	C (M)KP RAD 10N 250V	33450057
CS	5	C (M)KT RAD 470N 63V	33127123
CS	6	C CER2 SMD 100N 25V	32190001
CS	7	C ECAP RAD 47U 63V	34540053
CS	8, 10	C CER2 SMD 10N 50V	32536213
CS	11, 12	C CER2 SMD 4N7 50V	32536210

TRANSISTORS

TA	5	TR NPN SMD BC847B 45V	36145312
TK	1, 2, 4, 9	TR PNP SMD BC857B 45V	36145412
TK	3	TR NPN PWR BLK 2SD2012 60V 3A	36270004
TK	3, 12	HEATSINK SPRING	79400021
TK	6, 25	TR NPN SMD BC847B 45V	36145312
TK	8	TR NPN RAD BC637 60V 1A	36220003
TK	10	N-FET PWR BLK BUK457-400B 400V 11A	36370003
TK	11	TR NPN RAD BF422 250V	36125217
TK	12	TR NPN PWR BLK BU2525AF 1K5V 12A	36270003

Item		Description	Order no.
TO	1	N-FET BLK STP7NC70Z 700V 6.8A	36370018
TO	1	INSULATOR FOIL FOR 247 1k5V	49000088
TO	1	HEATSINK SPRING	79400021
TO	1-2⚠, 1-3⚠	CONN GRIPLET FOR 2-SIDED PCB d=1.9mm	41930009
TQ	1	TR NPN SMD BC847B 45V	36145312
TS	5, 6, 7, 8, 9, 10	TR PNP SMD BC857B 45V	36145412
DIODES			
DK	2, 3, 5, 6	DI SMD LS4148 75V 200mA	36490002
DK	9, 12	DI RECT PWR AX BYV36C 600V 1.6A	36575452
DK	11, 14	DI RECT PWR AX 1N4937 600V 1.0A	36575353
DK	13	DI AX RECT BYT56J 600V 1.5A	36240001
DK	15	DI RECT PWR AX BYV26C 600V 1.0A	36610005
DK	16	DI BK RECT BYM357X DAMPER+MODULATOR	36621564
DK	16	HEATSINK SPRING	79400021
DK	16-1⚠, 16-2⚠, 16-3⚠	CONN GRIPLET FOR 2-SIDED PCB d=1.9mm	41930009
DO	1, 3, 4, 6	DI RECT PWR AX BY527 1K25V 2A	36610001
DO	2	DI AX RECT UF5408 1K0V 3.0A	36621568
DO	7-1⚠, 7-2⚠	CONN GRIPLET FOR 2-SIDED PCB d=1.9mm	41930009
DO	9, 21	DI SMD LS4148 75V 200mA	36490002
DO	14	DI SMD BAS20 150V 200mA	36560320
DO	16-1⚠, 16-2⚠, 22-1⚠, 22-2⚠, 26-1⚠, 26-2⚠, 27-1⚠, 27-2⚠, 1-1⚠, 1-2⚠, 2-1⚠, 2-2⚠, 3-1⚠, 3-2⚠, 4-1⚠, 4-2⚠, 6-1⚠, 6-2⚠	CONN GRIPLET FOR 2-SIDED PCB d=1.9mm	41930009
DO	17, 18	DI RECT AX BYW98 200V 3A	36575470
DO	19	IC VREF TL431CLP	37410012
DO	26	DI AX SCHT SB560 60V 5.0A	36420005
DO	27	DI RECT PWR AX BA158 600V 0.5A	36561010
DS	1	DI SMD LS4148 75V 200mA	36490002
ZENERS			
ZDK	4	Z DIODE SMD BZX84C 51V	36770035
ZDK	5, 11	Z DIODE SMD BZX84C 2V4	36780005
ZDK	10, 3	Z DIODE SMD BZX84B 12V	36780008
ZDO	1, 11	Z DIODE SMD BZX84B 12V	36780008
ZDQ	1	Z DIODE SMD BZX84B 30V	36770033
INTEGRATED CIRCUITS			
ICA	2	IC AUDIO TDA2616 12+12W	37631259
ICA	2	HEATSINK SPRING	79400021
ICO	1	IC PWR CONT TDA16846	37450019
ICO	3⚠	IC OPTO COUPL SFH615A-2	36950009
ICO	5	IC V-REG PQ05RH11 5V 1.5A	37460008
ICO	5, 8, 11	HEATSINK SPRING	79400021
ICO	8	IC V-REG PQ3RD13 3V3 1.0A	37460033
ICO	11	IC V-REG L7812CV 12V 1.5A	37681748
ICS	1	IC DEFL TDA8354Q/N1I/N1E S1	37450017
ICS	1	HEATSINK SPRING	79400021

Item		Description	Order no.
FUSES			
FO	1⚠	FUSE F2.5A MINIATURE	43770004
FO	1-1⚠, 1-2⚠	CONN GRIPLET FOR 2-SIDED PCB d=1.9mm	41930009
FO	2⚠, 7⚠, 8⚠	FUSE T2.0A MINIATURE	43770005
TRANSFORMERS			
TRK	1	TRAFO 545 01 204 00	45380013
TRK	2⚠	DST TRAFO 1372.9018	45360083
TRK	2-5⚠, 2-7⚠, 2-9⚠, 2-10⚠, 2-13⚠	CONN GRIPLET FOR 2-SIDED PCB d=1.9mm	41930009
TRK	2-16⚠, 2-1⚠, 2-2⚠	CONN GRIPLET FOR 2-SIDED PCB d=1.9mm	41930009
TRK	3-1⚠, 3-3V, 3-4⚠, 3-6⚠, 5-1⚠, 5-3⚠, 5-4⚠, 5-6⚠	CONN GRIPLET FOR 2-SIDED PCB d=1.9mm	41930009
TRO	2⚠	MAINS TRAFO 2322.0030	45320069
TRO	2-10⚠, 2-19⚠, 2-21⚠, 2-22⚠	CONN GRIPLET FOR 2-SIDED PCB d=1.9mm	41930009
COILS			
TRK	5⚠	COIL BLK RAD 68uH 15% E/W	45380024
LK	1	COIL LIN BLK EKM12-136	45161283
LK	1-1⚠, 1-2⚠	CONN GRIPLET FOR 2-SIDED PCB d=1.9mm	41930009
LK	1-3⚠, 1-4⚠, 2-1⚠, 2-2⚠, 5-1⚠, 5-2⚠, 6-1⚠, 6-2⚠	CONN GRIPLET FOR 2-SIDED PCB d=1.9mm	41930009
LK	2	COIL BLK 280uH FJ1311	45610004
LK	3	COIL BLK 1.9mH 14R DRM0630192010K-01	45610018
LK	4	EMI SUPPRES BEAD 3.5x9	45620007
LK	5, 6	COIL BLK 47uH 7% 1.7A RAD	45620035
LO	3, 14, 15, 16	EMI SUPPRES BEAD 3.5x9	45620007
LO	5, 7	COIL BLK 10uH 1200mA RAD	45571699
LO	10	COIL AX 10uH 1200mA	45571698
LO	13⚠	COIL BLK 43mH 1.2A 250V	45390025
LO	13-2⚠, 13-3⚠, 13-7⚠, 13-10⚠, 13-12⚠, 14-1⚠, 14-2⚠, 15-1⚠, 15-2⚠, 17-1⚠, 17-3⚠, 17-4⚠, 17-6⚠, 17-7⚠, 17-12⚠	CONN GRIPLET FOR 2-SIDED PCB d=1.9mm	41930009
LQ	1	COIL BLK 10uH 1200mA RAD	45571699
OTHERS			
HCK	17_1-1⚠, 23_1-1⚠	CONN GRIPLET FOR 2-SIDED PCB d=1.9mm	41930009
HCK	29-1⚠, 29_1-1⚠	CONN GRIPLET FOR 2-SIDED PCB d=1.9mm	41930009
HCK	34-1⚠	CONN GRIPLET FOR 2-SIDED PCB d=1.9mm	41930009

Item		Description	Order no.
HXKT	1-1⚠, 2-1⚠, 3-1⚠, 4-1⚠, 7-1⚠, 8-1⚠, 9-1⚠	CONN GRIPLET FOR 2-SIDED PCB d=1.9mm	41930009
J	4, 45, 54, 61, 89, 121, 131, 137, 138, 151, 166, 173, 185, 195, 193, 200, 211, 219, 300, 324, 327, 329, 331, 332	JUMPER R=15,0 mm	85700150
J	6, 8, 55, 73, 81, 92, 113, 114, 123, 139, 140, 169, 188, 191, 213, 216, 338	JUMPER R=17,5 mm	85700175
J	12, 19, 21, 22, 23, 25, 39, 40, 41, 42, 43, 44, 50, 57, 60, 71, 76, 83, 84, 96, 158, 161, 167, 180, 187, 204, 207, 218, 302, 306, 311, 312, 315, 317, 318, 339	JUMPER R=12,5 mm	85700125
J	15, 49, 51, 53, 67, 68, 74, 75, 77, 98, 124, 134, 148, 164, 178, 181, 186, 199, 201, 217, 304, 330, 342	JUMPER R=20,0 mm	85700200
J	33, 301, 335, 340, 341, 344	R SMD 0R 0W10	31425802
J	93, 100, 103, 108, 142, 146, 147, 163, 179, 194, 206, 208, 210, 212, 215, 303, 305, 308	JUMPER R=10,0 mm	85700100
J	145	JUMPER R=11,25 mm	85701125
J	194-1⚠, 194-2⚠, 195-1⚠, 195-2⚠, 200-1⚠, 200-2⚠, 202-1⚠, 202-2⚠, 315-1⚠, 315-2⚠	CONN GRIPLET FOR 2-SIDED PCB d=1.9mm	41930009
J	307, 314, 328	JUMPER R= 7,5 mm	85700075
JK	1	JUMPER R=12,5 mm	85700125
JQ	10	R SMD 0R 0W10	31425802
TU	1	TUNER FQ1216ME/I V-3	58231067
XA	2	ROW CONN 4-PIN VERT	73190604
XAV	1	CONN ROW 9-PIN VERT	41710068
XAV	2, 3	CONN ROW 19-PIN VERT	41710073
XK	3	ROW CONN 5-PIN VERT	41710001
XK	3-1⚠, 3-2⚠, 3-3⚠, 3-4⚠, 3-5⚠, 7-1⚠, 7-2⚠	CONN GRIPLET FOR 2-SIDED PCB d=1.9mm	41930009
XK	6	CONN HEADER 6-PIN PITCH	41710002
XKT	1	BLADE CONN 2.8MM FOR PCB MALE	41930001
XO	1	ROW CONN 2-PIN VERT LOCK	73184750
XO	1-1⚠, 1-2⚠	CONN GRIPLET FOR 2-SIDED PCB d=1.9mm	41930009
XO	3	CONN ROW 2-PIN VERT	41710212
XS	1	ROW CONN 3-PIN VERT	73190603
XT	1, 2	CONN ROW 7-PIN VERT	41710077
		INS SLEEVE FOR CONN BLADE 2.8mm	47310004
		ANTENNA CABLE ASSY 200mm RCA/IEC	47780009
		HOLDER CLIP FOCUS 3mm	54041366
		HOLDER CLIP ANODE 4mm	54041417
		CONNECTING PLATE	84488470
	⚠	CABLE ANODE FOR DST 570mm+CHIMNEY CAP	96008868
	⚠	FOCUS CABLE 1,2 410MM	96010230
	⚠	SCREEN CABLE 460mm	96010244
	⚠	ELDOR-DST CABLE 280MM	96011091

AV163 Signal module*

RESISTORS

R	1, 2, 4, 5, 133	R SMD 270R 0W10	31425855
R	3, 63, 195	R SMD 1K0 0W10	31425820
R	6, 7, 80, 98, 148, 149, 161, 162, 170, 171, 291, 294, 312, 324, 332, 339	R SMD 100R 0W10	31490626
R	8, 9, 97, 230	R SMD 47K 0W10	31425836
R	10, 157, 184, 222, 224	R SMD 22K 0W10	31490656
R	12, 13, 52, 85, 87, 104, 105, 142, 178, 181, 220, 272, 273, 278	R SMD 10K 0W10	31425833
R	14	R SMD 22R J 0W10	31490617
R	15, 16, 19, 20, 25, 26, 27	R SMD 100K 0W10	31490664
R	17, 18, 29, 30, 35, 36, 37, 144, 200, 302	R SMD 470R 0W10	31490634
R	21, 22, 23, 24, 28, 65, 66, 67, 68, 69, 70, 221	R SMD 100K 0W10	31425844
R	31, 32, 33, 34, 38, 90, 91, 264, 348, 349, 354, 355	R SMD 470R 0W10	31425817
R	39	R SMD 8K2 0W10	31425832
R	40, 41, 42, 43, 64, 158, 167, 173, 194, 197, 254, 307	R SMD 220R 0W10	31490630
R	44, 45, 46, 47, 51, 54, 79, 92, 93, 94, 101, 102, 141, 217, 228, 229, 244, 245, 246, 247, 296	R SMD 100R 0W10	31425852
R	48, 49, 50, 53	R SMD 220K 0W10	31490668
R	55, 56, 58, 59, 60, 61, 62	R SMD 1M0 0W10	31490676
R	57	R SMD 1M0 0W10	31425801
R	72, 301, 310	R SMD 0R 0W10	31425802
R	78, 83, 84	R SMD 3K3 0W10	31490646
R	86, 169, 188, 261, 262	R SMD 2K2 0W10	31425828
R	88, 89, 269, 271	R SMD 33K 0W10	31490658
R	95, 96, 103, 106, 109, 123	R SMD 33K 0W10	31425840
R	99	R SMD 1K8 0W10	31490642
R	107, 112	R SMD 68K 0W10	31425838
R	108, 111	R SMD 47R 0W10	31425809
R	110	R CARF RAD 68R 5% 0W25	31630042
R	113	R SMD 3K9 0W10	31490647
R	130	R NTC SMD 33k	31910002
R	134, 175, 180, 187, 213, 279, 281, 283, 285	R SMD 75R 0W10	31490624
R	135, 306	R SMD 270R 0W10	31490631
R	136, 270	R SMD 18K 0W10	31490655
R	137	R CARF RAD 10K 5% 0W25	31630031

Item		Description	Order no.
R	138, 303, 304	R SMD 4K7 0W10	31490648
R	140, 150, 153, 243, 256, 290	R SMD 1K0 0W10	31490639
R	143, 159, 189, 292, 315, 322, 330, 337	R SMD 2K2 0W10	31490644
R	145, 152, 218, 219, 226, 259, 275, 277, 293, 295, 351, 352	R SMD 0R - JUMP	31490600
R	146	R SMD 68K 0W10	31490662
R	147	R SMD 6K8 0W10	31490650
R	151, 166	R SMD 27K 0W10	31490657
R	154, 155	R SMD 3K3 0W10	31425829
R	156, 163, 164, 165, 183, 190, 199, 204, 252, 253, 340, 341, 342	R SMD 10K 0W10	31490652
R	160, 231	R SMD 22K 0W10	31425837
R	174, 176, 177, 179, 182, 186, 206, 223, 232, 233, 234	R SMD 75R 0W10	31425861
R	196, 203, 205	R SMD 56K 0W10	31490661
R	198, 201, 202, 237, 360	R SMD 220R 0W10	31425815
R	214, 255, 266	R SMD 330R 0W10	31490632
R	227	R SMD 560R 0W10	31425818
R	235	R SMD 4K7 0W10	31425824
R	263	R SMD 430R 0W10	31425879
R	265	R SMD 910R 0W10	31425883
R	267	R SMD 390R 0W10	31425816
R	268	R SMD 300R 0W10	31425856
R	274	R SMD 82R 0W10	31425882
R	276	R SMD 330R 0W10	31425857
R	305	R SMD 27R 0W10	31490618
R	311, 325, 331, 338	R SMD 390R 0W10	31490633
R	313, 323, 329, 336	R SMD 22R 0W10	31490617
R	314	R SMD 33R 0W10	31490619
R	320, 321, 326, 328, 333, 335	R SMD 39R 0W10	31490620
R	343	EMI FERRITE BEAD SMD 470R/100MHz 150mA	46900003
R	345, 346, 347	EMI FERRITE BEAD SMD 600R/100MHz 200mA	46900004

CAPACITORS

C	1, 2, 5, 11, 20, 22, 25, 29, 31, 34, 35, 49, 50, 70, 90, 96, 104, 154, 182, 184, 185, 188, 191, 192, 193, 194, 195, 196, 199, 204, 206, 209, 221, 275, 280, 294, 309, 312, 316, 320, 329, 335, 336, 337, 345, 351	C CER2 SMD 100N 16V	32200117
C	3, 8, 12, 13, 210	C CER1 SMD 220P 50V	32200062
C	4, 43, 83, 84, 129, 303, 304, 305	C CER2 SMD 10N 50V	32200102
C	6, 7, 147, 187, 190	C CER2 SMD 1U0 10V	32525907
C	9, 21, 23, 24, 26, 27, 28, 32, 36, 37, 38, 39, 48, 82, 167, 173, 176, 200, 223, 273, 313, 318	C CER2 SMD 100N 25V	32190001
C	10, 201, 202	C CER1 SMD 22P 50V	32200038
C	17, 19	C CER2 SMD 47N 50V	32536222
C	30, 33	C CER1 SMD 33P 50V	32125507
C	40, 45, 46, 52, 91, 92, 93, 94, 105, 108, 117, 338, 339, 340	C CER2 SMD 47N 16V	32200113
C	41, 71, 72, 73, 74, 75, 76, 89, 97, 101, 102, 106, 107, 135, 136	C CER2 SMD 330N 16V	32525901
C	47, 69, 85, 86, 301	C CER2 SMD 1N0 50V	32536203
C	51, 56, 57, 66, 67, 68, 87, 88, 146, 149, 150, 151, 152, 291, 296, 297, 308	C CER2 SMD 1N0 50V	32790023
C	53, 54, 55, 62, 63, 64, 65, 156, 238, 242, 243, 244	C CER1 SMD 390P 50V	32145428
C	58, 59, 77, 78, 79, 80	C ECAP RAD 22U 35V	34540021
C	60, 61, 261	C CER2 SMD 390P 50V	32200068
C	81, 109, 127, 348, 352	C ECAP RAD 100U 25V	34540020
C	95	C ECAP RAD 3U3 63V	34540029
C	98, 99, 100, 175, 177, 180, 197, 198, 207, 208, 268, 288, 311, 317, 325, 326, 333	C ECAP RAD 10U 63V	34540025
C	103, 272	C CER1 SMD 47P 50V	32125508
C	118, 144, 145, 250, 253, 264, 282, 289, 290, 334, 342, 346, 347, 349	C CER2 SMD 10N 50V	32536213
C	125	C CER1 SMD 150P 50V	32125511
C	159, 160, 298, 302	C ECAP RAD 1U0 100V HV	34229675
C	174, 183, 220, 224, 281, 307, 314, 315, 319	C ECAP RAD 47U 50V	34540028
C	252	C CER1 SMD 10P 50V	32200030
C	270	C CER1 SMD 82P 50V	32125531
C	276, 277, 295	C CER1 SMD 47P 50V	32200046
C	278, 279	C CER1 SMD 3P3 50V	32200018
C	292, 330, 332, 355	C CER1 SMD 100P 50V	32200054
C	293	C CER2 SMD 470N 16V	32525903
C	299, 300	C CER1 SMD 27P 50V	32200040
C	310	C ECAP RAD 4U7 63V	34229578
C	331	C CER1 SMD 100P 50V	32125515
C	350	C CER1 SMD 68P 50V	32125516
C	353, 354	C CER2 SMD 4N7 50V	32536210

TRANSISTORS

T	1, 2, 6, 44, 54, 57, 60, 62, 65	TR PNP SMD BC857B 45V	36145412
T	3, 4, 5, 7, 8, 11, 13, 20, 22, 23, 24, 25, 26, 27, 50, 51, 55, 56, 58, 59, 61, 63, 64, 66	TR NPN SMD BC847B 45V	36145312
T	12	TR PNP RAD BC557B 45V	36146424
T	52, 53	N-FET SMD 2N7002 60V 180mA	36380002

DIODES

D	1	DIODE SMD BAV70 70V 215mA	36561954
D	18, 19, 20, 22	DIODE SMD BAS16 75V 250mA	36560318

Item	Description	Order no.
ZENERS		
D 2	Z DIODE SMD BZX84C 8V2	36780003
D 21	Z DIODE SMD BZX84B 5V6	36780021
INTEGRATED CIRCUITS		
IC 1	IC LOGIC SMD 74HC4053	37810038
IC 2	IC VIDEO SMD VSP9407B-QA-B11 P-MQFP80	37850243
IC 3	IC PWR MON. ZSM330 8	37410036
IC 4	IC VIDEO SMD TDA8601	37440045
IC 5	IC uC+text SDA6000-QH-B12 P-MQFP-128	37850226
IC 6	IC V-REG SMD L4931 2V5 0.3A	37460046
IC 7	IC OPAMP SMD MC33078D8	37470007
IC 10	IC EEPROM SMD 128x8 24LCS21A 8	37866003
IC 12	IC AUDIO MSP3411G-QA-B8-V3	37430039
IC 13	IC OPAMP SMD TL082CD 8	37470003
IC 14	**IC FLASH 1Mx16 CURRENT SOFTWARE VERSION 01.11.2002**	**MC2B01.0**
IC 14	IC FLASH 1Mx16 M29W160DB90N1 (BLANCO)	37860045
IC 16	IC SDRAM 4Bx1Mx16 K4S641632F-TC70000	37860044
IC 17	IC VIDEO SMD DDP3315C-QA-D2 P-MQFP80	37850236
IC 18	IC LOGIC SMD 4052BT	37810014
IC 19	IC EEPROM 4kx8 AT24C32 3-5V8	37866017
IC 22	IC V-REG SMD LM1117 1V8 0,8A	37460044
COILS		
L 15, 16, 28, 29, 34, 35, 36	COIL SMD 10uH 1,6A	45640036
LAV 1, 2, 3, 4	COIL SMD 2,2uH 30mA	45640023
LAV 6, 23, 26, 28	COIL SMD 10uH 1,6A	45640036
LAV 13, 14, 15, 27	COIL SMD 10uH 15mA	45640026
FILTERS		
L 3, 26, 27	EMIFIL RAD 4N7 1,0A	45558419
LAV 25	EMIFIL RAD 4N7 1,0A	45558419
CRYSTALS		
Z 1	CRYSTAL SMD 20.250 MHz	45730022
Z 7	CRYSTAL SMD 6.000 MHz	45730024
Z 8	CRYSTAL SMD 18.432 MHz	45730021
Z 9	CRYSTAL SMD 5.000 MHz	45730023
OTHERS		
JAV 2, 3, 4, 5, 14	R SMD 0R	31490600
JAV 9, 24	R SMD 0R 0W10	31425802
L 30, 31, 32, 33	R SMD 0R 0W10	31425802
XAF 1	CONN HEADER 20-PIN PITCH	41710071
XAH 1	CONN HEADER 10-PIN PITCH	41710070
XAV 1	MODULE CONN 9-PIN 90-DEG	41720002
XAV 2, 3	CONN MODULE 19-PIN	41720048
XAV 4	SCART CONNECTOR BLACK	41911005
XAV 5	SCART CONNECTOR BLUE	41911006
XAV 6	SCART CONNECTOR ORANGE	41911007
XAV 7	CONN RCA VERT	41910013
XAV 8	CONN D-TYPE 15-PIN VGA HD FEMALE	41720051

AV165 Signal module*

RESISTORS			
R	1, 2, 4, 5, 133	R SMD 270R 0W10	31425855
R	3, 63, 195	R SMD 1K0 0W10	31425820
R	6, 7, 80, 98, 148, 149, 161, 162, 170, 171, 291, 294, 312, 324, 332, 339	R SMD 100R 0W10	31490626
R	8, 9	R SMD 47K 0W10	31425836
R	10, 157, 184, 222, 224	R SMD 22K 0W10	31490656
R	12, 13, 85, 104, 105, 142, 178, 272, 273, 278	R SMD 10K 0W10	31425833
R	14	R SMD 22R J 0W10	31490617
R	19, 20, 25, 26, 27, 344	R SMD 100K 0W10	31490664
R	21, 22, 28	R SMD 100K 0W10	31425844
R	29, 30, 35, 36, 37, 144, 200, 302	R SMD 470R 0W10	31490634
R	31, 32, 38, 264, 348, 349, 354, 355	R SMD 470R 0W10	31425817
R	39	R SMD 8K2 0W10	31425832
R	44, 45, 46, 47, 79, 92, 93, 94, 101, 102, 141, 217, 244, 245, 246, 247, 296	R SMD 100R 0W10	31425852
R	52, 72, 301	R SMD 0R 0W10	31425802
R	55, 56, 58, 59, 60, 61, 62	R SMD 1M0 0W10	31490676
R	57	R SMD 1M0 0W10	31425801
R	64, 158, 167, 173, 194, 197, 254, 307	R SMD 220R 0W10	31490630
R	78, 83, 84	R SMD 3K3 0W10	31490646
R	99	R SMD 1K8 0W10	31490642
R	106, 109	R SMD 33K 0W10	31425840
R	107, 112	R SMD 68K 0W10	31425838
R	108, 111	R SMD 47R 0W10	31425809
R	110	R CARF RAD 180R 5% 0W25	31630026
R	113	R SMD 3K9 0W10	31490647
R	130	R NTC SMD 33k	31910002
R	134, 175, 187, 213, 285	R SMD 75R 0W10	31490624
R	135, 306	R SMD 270R 0W10	31490631
R	136, 270	R SMD 18K 0W10	31490655
R	137	R CARF RAD 10K 5% 0W25	31630031
R	138, 303, 304	R SMD 4K7 0W10	31490648
R	140, 153, 243, 256, 290	R SMD 1K0 0W10	31490639
R	143, 159, 189, 292, 315, 322, 330, 337	R SMD 2K2 0W10	31490644
R	146	R SMD 68K 0W10	31490662
R	147	R SMD 6K8 0W10	31490650
R	151, 166	R SMD 27K 0W10	31490657
R	154, 155	R SMD 3K3 0W10	31425829
R	156, 163, 164, 165, 183, 190, 199, 204, 252, 253, 340, 341, 342	R SMD 10K 0W10	31490652
R	160, 222, 231	R SMD 22K 0W10	31425837
R	169, 188, 261, 262	R SMD 2K2 0W10	31425828

Item		Description	Order no.
R	174, 176, 177, 186, 206, 223	R SMD 75R 0W10	31425861
R	196, 203, 205	R SMD 56K 0W10	31490661
R	198, 201, 202, 237, 360	R SMD 220R 0W10	31425815
R	214, 255, 266	R SMD 330R 0W10	31490632
R	218, 219, 226, 293, 295, 309, 351, 352	R SMD 0R - JUMP	31490600
R	227	R SMD 560R 0W10	31425818
R	235	R SMD 4K7 0W10	31425824
R	263	R SMD 430R 0W10	31425879
R	265	R SMD 910R 0W10	31425883
R	267	R SMD 390R 0W10	31425816
R	268	R SMD 300R 0W10	31425856
R	269, 271	R SMD 33K 0W10	31490658
R	274	R SMD 82R 0W10	31425882
R	276	R SMD 330R 0W10	31425857
R	305	R SMD 27R 0W10	31490618
R	311, 331, 325, 338	R SMD 390R 0W10	31490633
R	313, 323, 329, 336	R SMD 22R 0W10	31490617
R	314	R SMD 33R 0W10	31490619
R	320, 321, 326, 328, 333, 335	R SMD 39R 0W10	31490620
R	343	EMI FERRITE BEAD SMD 470R/100MHz 150mA	46900003
R	345, 346, 347	EMI FERRITE BEAD SMD 600R/100MHz 200mA	46900004

CAPACITORS

C	1, 2, 5, 11, 20, 22, 25, 29, 31, 34, 35, 49, 50, 90, 96, 154, 182, 184, 185, 188, 191, 192, 193, 194, 195, 196, 199, 204, 206, 209, 275, 280, 294, 309, 312, 316, 320, 329, 335, 336, 337, 345, 351	C CER2 SMD 100N 16V	32200117
C	3, 8, 12, 13, 210	C CER1 SMD 220P 50V	32200062
C	4, 43, 129, 303, 304, 305	C CER2 SMD 10N 50V 0603	32200102
C	6, 7, 147, 187, 190	C CER2 SMD 1U0 10V	32525907
C	9, 21, 23, 24, 26, 27, 28, 32, 36, 37, 38, 39, 48, 82, 167, 176, 200, 273, 313, 318	C CER2 SMD 100N 25V	32190001
C	10, 201, 202	C CER1 SMD 22P 50V	32200038
C	17, 19	C CER2 SMD 47N 50V	32536222
C	30, 33	C CER1 SMD 33P 50V	32125507
C	41, 71, 72, 73, 74, 101, 102	C CER2 SMD 330N 16V	32525901
C	45, 92, 93, 94, 338, 339, 340	C CER2 SMD 47N 16V 0603	32200113
C	47, 69, 85, 86, 301	C CER2 SMD 1N0 50V	32536203
C	51, 66, 67, 68, 87, 88, 146, 149, 150, 151, 152, 291, 296, 297, 308	C CER2 SMD 1N0 50V 0603	32790023
C	54, 55, 62, 63, 156, 238, 242, 243, 244	C CER1 SMD 390P 50V	32145428
C	60, 61	C CER2 SMD 390P 50V	32200068
C	77, 78, 79, 80	C ECAP RAD 22U 35V	34540021
C	81, 109, 127, 348, 352	C ECAP RAD 100U 25V	34540020
C	95	C ECAP RAD 3U3 63V	34540029
C	98, 99, 100, 175, 177, 180, 197, 198, 207, 208, 268, 288, 311, 317, 325, 326, 333	C ECAP RAD 10U 63V	34540025
C	103, 272	C CER1 SMD 47P 50V	32125508
C	118, 282, 289, 290, 334, 342, 346, 347, 349	C CER2 SMD 10N 50V	32536213
C	125	C CER1 SMD 150P 50V	32125511
C	159, 160, 298, 302	C ECAP RAD 1U0 100V HV	34229675
C	174, 183, 281, 307, 314, 315, 319	C ECAP RAD 47U 50V	34540028
C	252	C CER1 SMD 10P 50V	32200030
C	270	C CER1 SMD 82P 50V	32125531
C	276, 277, 295	C CER1 SMD 47P 50V	32200046
C	278, 279	C CER1 SMD 3P3 50V	32200018
C	292, 330, 332, 355	C CER1 SMD 100P 50V	32200054
C	293	C CER2 SMD 470N 16V	32525903
C	299, 300	C CER1 SMD 27P 50V	32200040
C	310	C ECAP RAD 4U7 63V	34229578
C	331	C CER1 SMD 100P 50V	32125515
C	350	C CER1 SMD 68P 50V	32125516
C	353, 354	C CER2 SMD 4N7 50V	32536210

TRANSISTORS

T	1, 2, 6, 44, 54, 57, 60, 62, 65	TR PNP SMD BC857B 45V	36145412
T	3, 5, 7, 8, 11, 13, 20, 22, 23, 24, 25, 26, 27, 50, 51, 55, 56, 58, 59, 61, 63, 64, 66	TR NPN SMD BC847B 45V	36145312
T	12	TR PNP RAD BC557B 45V	36146424
T	52, 53	N-FET SMD 2N7002 60V 180mA	36380002

DIODES

D	1	DIODE SMD BAV70 70V 215mA	36561954
D	18, 19, 20, 22	DIODE SMD BAS16 75V 250mA	36560318

ZENERS

D	2	Z DIODE SMD BZX84C 8V2	36780003
D	21	Z DIODE SMD BZX84B 5V6	36780021

INTEGRATED CIRCUITS

IC	1	IC LOGIC SMD 74HC4053	37810038
IC	2	IC VIDEO SMD VSP9407B-QA-B11 P-MQFP80	37850243
IC	3	IC PWR MON. ZSM330 8	37410036
IC	5	IC uC+TEXT SDA6000-QH-B12 P-MQFP-128	37850226
IC	6	IC V-REG SMD L4931 2V5 0,3A	37460046
IC	7	IC OPAMP SMD MC33078D8	37470007
IC	12	IC AUDIO MSP3411G-QA-B8-V3	37430039
IC	14	**IC FLASH 1Mx16 CURRENT SOFTWARE VERSION 01.11.2002**	**MC2B01.0**

Item		Description	Order no.
IC	14	IC FLASH 1Mx16 M29W160DB90N1 (BLANCO)	37860045
IC	16	IC SDRAM 4Bx1Mx16 K4S641632F-TC70000	37860044
IC	17	IC VIDEO SMD DDP3315C-QA-D2 P-MQFP80	37850236
IC	19	IC EEPROM 4kx8 AT24C32 3-5V8	37866017
IC	22	IC V-REG SMD LM1117 1V8 0,8A	37460044
COILS			
L	15, 16, 28, 29, 34, 35, 36	COIL SMD 10uH 1,6A	45640036
LAV	1, 2, 4	COIL SMD 2,2uH 30mA	45640023
LAV	6, 23, 26, 28	COIL SMD 10uH 1,6A	45640036
LAV	15, 27	COIL SMD 10uH 15mA	45640026
FILTERS			
L	3, 26, 27	EMIFIL RAD 4N7 1,0A	45558419
LAV	25	EMIFIL RAD 4N7 1,0A	45558419
CRYSTALS			
Z	1	CRYSTAL SMD 20,250 MHz	45730022
Z	7	CRYSTAL SMD 6,000 MHz	45730024
Z	8	CRYSTAL SMD 18,432 MHz	45730021
Z	9	CRYSTAL SMD 5,000 MHz	45730023
OTHERS			
JAV	2, 3, 4, 5, 14, 19, 21, 22, 23	R SMD 0R	31490600
JAV	7, 8, 9, 24	R SMD 0R 0W10	31425802
XAF	1	CONN HEADER 20-PIN PITCH	41710071
XAH	1	CONN HEADER 10-PIN PITCH	41710070
XAV	1	MODULE CONN 9-PIN 90-DEG	41720002
XAV	2, 3	CONN MODULE 19-PIN	41720048
XAV	4	SCART CONNECTOR BLACK	41911005
XAV	5	SCART CONNECTOR BLUE	41911006
XAV	7	A/V MODULE BRACKET	84481920

HH201 CRT module*

RESISTORS			
RH	1	R SMD 3K0 0W10	31490062
RH	2	R SMD 1K00 0W10	31490056
RH	26	R CARF RAD 33K 5% 0W25	31630036
RH	3, 12, 16, 60	R SMD 0R 0W10	31425802
RH	6, 7, 8, 9, 11, 14	R SMD 1K5 0W10	31425826
RH	4, 13, 17	R METF AX 68K 2% 1W0	31440008
RH	18, 19, 21, 22, 23, 24	R COMP AX 470R 0W25	31595565
RH	27	R CARF AX 4M7 5% 0W25	31660029
RH	28, 33	R COMP AX 1K5 0W50	31594639
RH	31	R SMD 68R 0W10	31425876
RH	36	R SMD 100K 0W10	31425844
RH	37, 52	R SMD 2K2 0W10	31425828
RH	38	R SMD 470R 0W10	31425817
RH	39, 59	R SMD 1K0 0W10	31425820
RH	40	R SMD 100R 0W10	31425852
RH	41, 53	R SMD 6K8 0W10	31425831
RH	42, 54	R CARF RAD 330R 5% 0W25	31514524
RH	43, 56	R CARF RAD 3R3 5% 0W25	31514515
RH	44⚠	R FUS V RD 330R 0W25	31860005
RH	46, 48	R CARF RAD 10R 5% 0W25	31514513
RH	47, 49	R SMD 18K 0W10	31425813
RH	50	R SMD 560R 0W10	31425818
RH	51	R CARF RAD 220R 0W25	31630051
RH	58	R SMD 330R 0W10	31425857
RH	61, 62, 63	R SMD 220R 0W10	31425815
RH	64	R CARF AX 270R 5% 0W25	31660011
CAPACITORS			
CH	1	C ECAP RAD 47U 16V	34223251
CH	2, 7, 12, 36, 38	C CER2 SMD 22N 50V	32536221
CH	3, 8, 13, 32, 33, 34, 37, 39	C CER2 SMD 100N 50V	32536223
CH	4, 9, 14, 19	C (M)KT RAD 22N 250V	33380002
CH	5	C CER1 SMD 68P 50V	32125516
CH	6, 11, 16	C CER2 SMD 1N0 50V	32536203
CH	17	C ECAP BLK 4U7 250V HV	34610001
CH	18	C ECAP BLK 10U 250V HV	34610002
CH	22	C (M)KT BLK 8N2 1K5V	33360007
CH	27, 29, 43	C ECAP RAD 10U 63V	34540025
CH	28	C ECAP RAD 100U 25V	34540020
CH	31	C ECAP RAD 47U 63V	34540053
CH	41	C CER1 SMD 680P 50V	32190014
CH	42	C CER1 SMD 47P 50V	32125508
CH	44	C CER2 SMD 10N 50V	32536213
CH	46	C CER2 SMD 4N7 50V	32536210
TRANSISTORS			
TH	1	TR NPN RAD BF422 250V	36125217
TH	2, 6	TR PNP SMD BC857B 45V	36145412
TH	3	TR NPN SMD BC847B 45V	36145312
TH	4	TR PNP BLK 2SA1837 230V 1A	36270021
TH	7	TR NPN BLK 2SC4793 230V 1A	36270020
DIODES			
DH	1, 2	DI RECT PWR AX BYV36C 600V 1.6A	36575452
DH	3, 4, 5	DIODE SMD BAS16 75V 250mA	36560318
DH	6, 7, 8, 9, 10, 11	DI SMD BAV103 200V 250mA	36561950
DH	12, 13	DI SMD LS4148 75V 200mA	36490002
INTEGRATED CIRCUITS			
ICH	1, 2, 3	IC VIDEO TDA6111Q-N4C	37440004
COILS			
LH	1	COIL AX 10UH 10% 230mA	45620003
LH	6, 7	COIL AX 10uH 1200mA	45571698
OTHERS			
CRT	1, 2	BLADE CONN 2.8MM	41930001
J	4, 18, 24, 29, 30, 31	JUMPER R=10,0 mm	85600061
J	17	JUMPER R=12,5 mm	85600078
J	20	JUMPER R=15,0 mm	85600085
J	21, 25, 27, 28, 32	JUMPER R=7,5 mm	85600054
J	22	R SMD 0R 0W10	31425802

Item		Description	Order no.
S	1⚠	SPARK GAP 2,0kV +/-500V	41555001
SOH	2⚠	CRT SOCKET 0330 7700 44	41510006
UG	2	BLADE CONN 2.8MM	41930001
XH	1	WIRE BUNDLE 6-PIN 370mm	96010019
XH	2	RGB CABLE 10-PIN	96010198
XH	3	H-DY SVM CABLE.	96010204
		PT-SCREW 3,5x6,5 POZ	62038859

HH203 CRT module*

RESISTORS

RH	1	R SMD 3K0 0W10	31490062
RH	2	R SMD 1K00 0W10	31490056
RH	3, 12, 16	R SMD 0R 0W10	31425802
RH	4, 13, 17	R METF AX 68K 2% 1W0	31440008
RH	6, 7, 8, 9, 11, 14	R SMD 1K5 0W10	31425826
RH	18, 19, 21, 22, 23, 24	R COMP AX 470R 0W25	31595565
RH	26	R CARF RAD 33K 5% 0W25	31630036
RH	27	R CARF AX 4M7 5% 0W25	31660029
RH	28, 33	R COMP AX 1K5 0W50	31594639
RH	31	R SMD 68R 0W10	31425876
RH	36	R SMD 100K 0W10	31425844
RH	37	R SMD 2K2 0W10	31425828
RH	38	R SMD 470R 0W10	31425817
RH	39, 59	R SMD 1K0 0W10	31425820
RH	40	R SMD 100R 0W10	31425852
RH	64	R CARF AX 270R 5% 0W25	31660011
RH	61, 62, 63	R SMD 220R 0W10	31425815

CAPACITORS

CH	1	C ECAP RAD 47U 16V	34223251
CH	2, 7, 12	C CER2 SMD 22N 50V	32536221
CH	3, 8, 13	C CER2 SMD 100N 50V	32536223
CH	4, 9, 14, 19	C (M)KT RAD 22N 250V	33380002
CH	5	C CER1 SMD 68P 50V	32125516
CH	6, 11, 16	C CER2 SMD 1N0 50V	32536203
CH	17	C ECAP BLK 4U7 250V HV	34610001
CH	18	C ECAP BLK 10U 250V HV	34610002
CH	22	C (M)KT BLK 8N2 1K5V	33360007
CH	27, 43	C ECAP RAD 10U 63V	34540025
CH	28	C ECAP RAD 100U 25V	34540020
CH	46	C CER2 SMD 4N7 50V	32536210

TRANSISTORS

TH	1	TR NPN RAD BF422 250V	36125217
TH	2	TR PNP SMD BC857B 45V	36145412

DIODES

DH	1, 2	DI RECT PWR AX BYV36C 600V 1.6A	36575452
DH	3, 4, 5	DIODE SMD BAS16 75V 250mA	36560318
DH	6, 7, 8, 9, 10, 11	DI SMD BAV103 200V 250mA	36561950

ZENERS

ZDH	1	Z DIODE SMD BZX84B 24V 2%	36780022

Item		Description	Order no.

INTEGRATED CIRCUITS

ICH	1, 2, 3	IC VIDEO TDA6111Q-N4C	37440004

COILS

LH	1	COIL AX 10UH 10% 230mA	45620003
LH	6	COIL AX 10uH 1200mA	45571698

OTHERS

CRT	1, 2	BLADE CONN 2.8MM	41930001
J	4, 18, 24, 29, 30, 31	JUMPER R=10,0 mm	85600061
J	17	JUMPER R=12,5 mm	85600078
J	20	JUMPER R=15,0 mm	85600085
J	21, 25, 27, 28, 32	JUMPER R=7,5 mm	85600054
J	22	R SMD 0R 0W10	31425802
S	1⚠	SPARK GAP 2,0kV +/-500V	41555001
SOH	1⚠	CRT SOCKET 0330 5500 34	41554034
UG	2	BLADE CONN 2.8MM	41930001
XH	1	WIRE BUNDLE 6-PIN 370mm	96010019
XH	2	RGB CABLE 10-PIN	96010198
		PT-SCREW 3,5x6,5 POZ	62038859

FC110 Control unit module

RESISTORS

RFC	1, 2, 31	R SMD 47K 0W10	31425836
RFC	3, 4	R SMD 75R 0W10	31425861
RFC	5	R SMD 470R 0W10	31425817
RFC	7, 16	R SMD 22K 0W10	31425837
RFC	9, 14, 37	R SMD 1K0 0W10	31425820
RFC	10, 55	R SMD 4K7 0W10	31425824
RFC	13	R SMD 100R 0W10	31425852
RFC	17	R SMD 100K 0W10	31425844
RFC	19, 20	R SMD 10K 0W10	31425833
RFC	21, 22	R CARF AX 2K2 5% 0W25	31660037
RFC	26	R CARF AX 100R 0W25	31660049
RFC	27	R FUS V RD 150R 0W25	31860004
RFC	41	R SMD 220R 0W10	31425815
RFC	43, 44, 45, 48, 49	R SMD 1M0 0W10	31425801
RFC	47	R SMD 270R 0W10	31425855
RFC	52	R FUS V AX 4K7 0W50	31850009
RFC	56	R FUS V RD 47R 0W25	31860006
RFC	57	R SMD 2K20 0W10	31490098
RFC	58	R SMD 6K81 0W10	31490455

CAPACITORS

CFC	1_1-1⚠, 1-2⚠, 2-1⚠, 2-2⚠	CONN GRIPLET FOR 2-SIDED PCB d=1,9mm	41930009
CFC	1⚠, 2⚠	C MP/P BLK 100N 275VAC X2	33260003
CFC	3	C ECAP RAD 470U 10V	34221242
CFC	4	C ECAP BLK 1000U 16V	34550001
CFC	5, 7	C CER2 SMD 4N7 50V	32536210
CFC	6, 10	C CER1 SMD 220P 50V	32125513
CFC	8, 20	C ECAP RAD 10U 35V	34540027
CFC	11	R SMD 0R 0W10	31425802
CFC	12, 13	C CER1 SMD 390P 50V	32145428
CFC	14, 15	C ECAP RAD 100U 25V	34540020
CFC	16, 17	C CER2 SMD 22N 50V	32536221
CFC	18, 19	C CER2 SMD 47N 50V	32536222
CFC	21, 22	C CER1 RAD 15P 100V	32180003

Item	Description	Order no.
CFC 27	C ECAP RAD 2U2 400V	34540097
CFC 32	C CER2 SMD 10N 50V	32536213
CFC 35, 38, 39	C CER2 SMD 100N 25V	32190001
CFC 36	C CER2 RAD 47P 1K0V	32790054
CFC 42	C CER2 RAD 1N5 S 2K0V	32670976
CFC 43	C CER1 SMD 82P 50V	32125531
CFC 44	C CER1 SMD 270P 50V	32125529
CFC 45	C CER1 SMD 470P 50V	32145430
TRANSISTORS		
TFC 5, 6, 7, 8	TR NPN SMD BC847B 45V	36145312
DIODES		
DFC 1	DI RECT PWR AX BYV36C 600V 1,6A	36575452
DFC 4	LED RAD LS5460HL RED 5mm	36910004
DFC 9	JUMPER R=12,5 mm	85600078
DFC 11-1⚠	CONN GRIPLET FOR 2-SIDED PCB d=1,9mm	41930009
DFC 6, 7	DI RECT PWR AX BY527 1K25V 2A	36610001
DFC 17	LED RAD LG5460GK GREEN 5mm	36910005
DFC 18	IC VREF TL431CLP	37410012
	DI TRC BLK MAC9M 600V 8A	36471103
INTEGRATED CIRCUITS		
ICFC 1	IC PWR CONT TNY253P	37410032
ICFC 2⚠	IC OPTO TRIAC TLP763JF	36950010
ICFC 3⚠	IC OPTO COUPL SFH615A-2	36950009
FUSES		
FFC 1⚠	FUSE T3,15A HIGH BREAK 5X20MM	43751652
FFC 1	FUSEHOLDER CLIPS 5*20MM R=5,0mm	41540001
TRANSFORMERS		
MFC 2⚠	MAINS TRAFO 2262.0029B/TM2673	45310006
COILS		
LFC 1, 2	COIL AX 40uH 2000mA	45620057
LFC 3, 4, 7, 8	COIL SMD 10uH 15mA	45640026
LFC 6, 12	COIL SMD 2,2uH 30mA	45640023
LFC 9	R SMD 0R 0W10	31425802
LFC 10	COIL BLK 10uH 1200mA RAD	45571699
LFC 11	COIL SMD 3,3uH 30mA	45640024
MFC 1⚠	COIL MAINS BLK TRE293/30H	45390023
OTHERS		
A 2, 4	MODULE HOLDER	81408167
HFC 1	IR-RECEIVER TSOP1838SS3V 3-PIN	36940002
HFC 1	LED SPACER LEDM-3-06	84481682

Item	Description	Order no.
J 1, 3, 6, 7, 8, 10, 11, 12, 14, 15, 16, 17, 18, 19, 20, 21, 22, 23, 25, 26, 27, 28, 39, 50, 54, 56	JUMPER R=12,5 mm	85600078
J 2, 5, 13, 31, 38, 48, 49, 51, 52, 53, 55	R SMD 0R 0W10	31425802
JFC 2	JUMPER R=12,5 mm	85600078
JFC 3, 14, 15, 16, 17	R SMD 0R 0W10	31425802
LFC 2-1⚠, 2-2⚠, 1-1⚠, 1-2⚠	CONN GRIPLET FOR 2-SIDED PCB d=1,9mm	41930009
MFC 1-1⚠, 1-2⚠, 1-3⚠, 1-4⚠	CONN GRIPLET FOR 2-SIDED PCB d=1,9mm	41930009
SWFC 1, 2, 3, 4	TACTILE SWITCH 4	41150685
UFC 1-1⚠, 1-2⚠, 1-3⚠, 1-4⚠	CONN GRIPLET FOR 2-SIDED PCB d=1,9mm	41930009
UFC 1⚠	MAINS SWITCH 250V 6/120A	41210011
XA 5	SIGNAL CABLE 20-PIN 600mm	96010197
XFC 1-1⚠, 1-2⚠	CONN GRIPLET FOR 2-SIDED PCB d=1,9mm	41930009
XFC 1	ROW CONN 2-PIN VERT LOCK	73184750
XFC 6	CONN RCA 3 IN ROW	41430747
XFC 9	CONN S-VHS	41452244
XFC 10	CONN PHONO 3,5mm JACK WITH SENSE SWITCH	41910001
XO 2-1⚠, 1-1⚠	CONN GRIPLET FOR 2-SIDED PCB d=1,9mm	41930009
XO 2 ⚠	WIREPLUG FOR 2-PIN 410mm	96008011
	COVER FOR CAMERA CONNECTOR	84488890

PP160 PiP module

RESISTORS		
RPP 1, 2	R SMD 270R 0W10	31490631
RPP 5	R SMD 5K6 0W10	31490649
RPP 6	R SMD 6K8 0W10	31490650
RPP 7, 8, 9	R SMD 10K 0W10	31490652
RPP 10	R SMD 220R 0W10	31490630
RPP 11	R SMD 75R 0W10	31490624
RPP 12, 50, 51, 52, 53, 54, 55, 56, 57	EMI FERRITE BEAD SMD 2500R/100MHz 100mA	46900005
RPP 13, 16, 17, 49	R SMD 100R 0W10	31490626
RPP 14, 27, 28, 29	R SMD 470R 0W10	31425817
RPP 15	R SMD 12K 0W10	31425834
RPP 18, 20	R SMD 33K 0W10	31425840
RPP 19, 40, 46	R SMD 100R 0W10	31425852
RPP 21, 23	R SMD 180K 0W10	31490012
RPP 22, 25, 30, 31, 32, 45, 48	R SMD 100K 0W10	31425844
RPP 24, 26, 41, 42, 43, 44, 47	R SMD 10K 0W10	31425833
RPP 33	R SMD 680K 0W10	31490059
RPP 34, 38	R SMD 120K 0W10	31425845
RPP 35	R SMD 27K 0W10	31425839
RPP 36, 37	R SMD 1M0 0W10	31425801
RPP 39	R SMD 5K6 0W10	31425825
CAPACITORS		
CPP 1, 21, 30	C ECAP RAD 47U 16V	34223251
CPP 2	C CER2 SMD 22N 25V	32790026
CPP 3, 4	C CER2 SMD 10N 50V	32200102

Item	Description	Order no.
CPP 5, 8, 9, 10, 11, 12, 13, 14, 15, 16, 17, 18, 20, 29, 37	C CER2 SMD 100N 16V	32200117
CPP 6, 7	C CER1 SMD 27P 50V	32200040
CPP 19	C ECAP RAD 100U 16V	34223252
CPP 22, 34, 35, 36	C CER2 SMD 100N 25V	32190001
CPP 23, 24, 25, 26, 27, 28	C ECAP RAD 22U 35V	34540021
CPP 31	C CER2 SMD 10N 50V	32536213
CPP 32, 33	C CER1 SMD 2N250V	32190026
CPP 38, 39	C CER1 SMD 100P 50V	32200054
TRANSISTORS		
TPP 1	TR NPN SMD BC847B 45V	36145312
TPP 2, 3, 4, 5, 6, 7	N-FET SMD 2N7002 60V 180mA	36380002
TPP 8	TR NPN SMD BC848B 30V	36145322
INTEGRATED CIRCUITS		
ICPP 1	IC VIDEO SMD DRX3960A-F5	37850242
ICPP 2	IC V-REG SMD LP2981 3V3	37460045
ICPP 3, 4	IC OPAMP SMD TL082CD 8	37470003
COILS		
LPP 1	COIL SMD 1.0uH 245mA	45620051
LPP 4, 5, 6	COIL SMD 10uH 15mA	45640026
LPP 2, 3, 7, 8	COIL BLK 10uH 1200mA RAD	45571699
FILTERS		
ZPP 1	SAW FILTER X6966D 36,125MHz	45740038
CRYSTALS		
ZPP 2	CRYSTAL BLK 20.250 MHz	45730011
OTHERS		
J 1	JUMPER R=7,5 mm	85600054
J 2, 12	JUMPER R=20,0 mm	85600102
J 3	EMI FERRITE BEAD SMD 2500R/100MHz 100mA	46900005
J 4, 5	R SMD 0R	31490600
J 6, 7, 13, 14	R SMD 0R 0W10	31425802
J 8, 15	JUMPER R=12,5 mm	85600078
J 11	JUMPER R=15,0 mm	85600085
TU 1	TUNER UV1316T/S IH-3	58231069
X 1, 2	CONN MODULE 7-PIN 9LOCK	41720049
X 3	CONN RCA	41910019
	ANT CABLE ASSY 200mm RCA/IEC	47780022

Item	Description	Order no.
AJ106 Crossover network module*		
RESISTORS		
RAJ 1	R METOX BK 4R7 1W5 RAD	31450004
CAPACITORS		
CAJ 1	C ECAP BLK 4U7 50V	34540034
CAJ 2	C ECAP BLK 4U7 50V	34540034
COILS		
LAJ 1	COIL 36-18 1mH	93002510
OTHERS		
XAJ 1	ROW CONN 3-N VERT LOCK	73190603
TW-	WIRE 400mm BLACK	96010170
TW+	WIRE 400mm BROWN	96010171
MB+	WIRE 350mm RED	96010205
MB-	WIRE 350mm GREEN	96010206

RCU100 Remote Control

REMOTE CONTROL UNIVERSUM	RCU100
BATTERY COVER	84433430

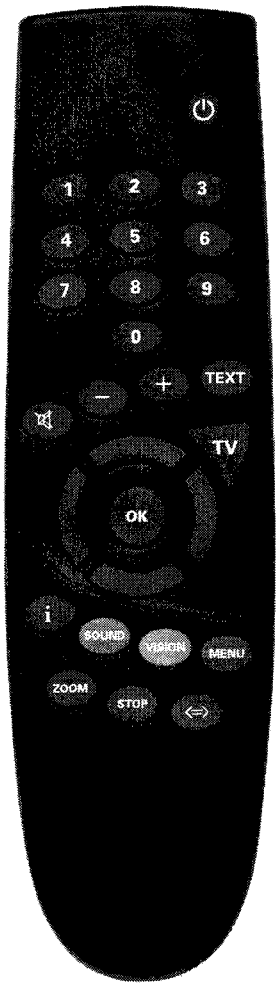

Mechanical parts, chassis

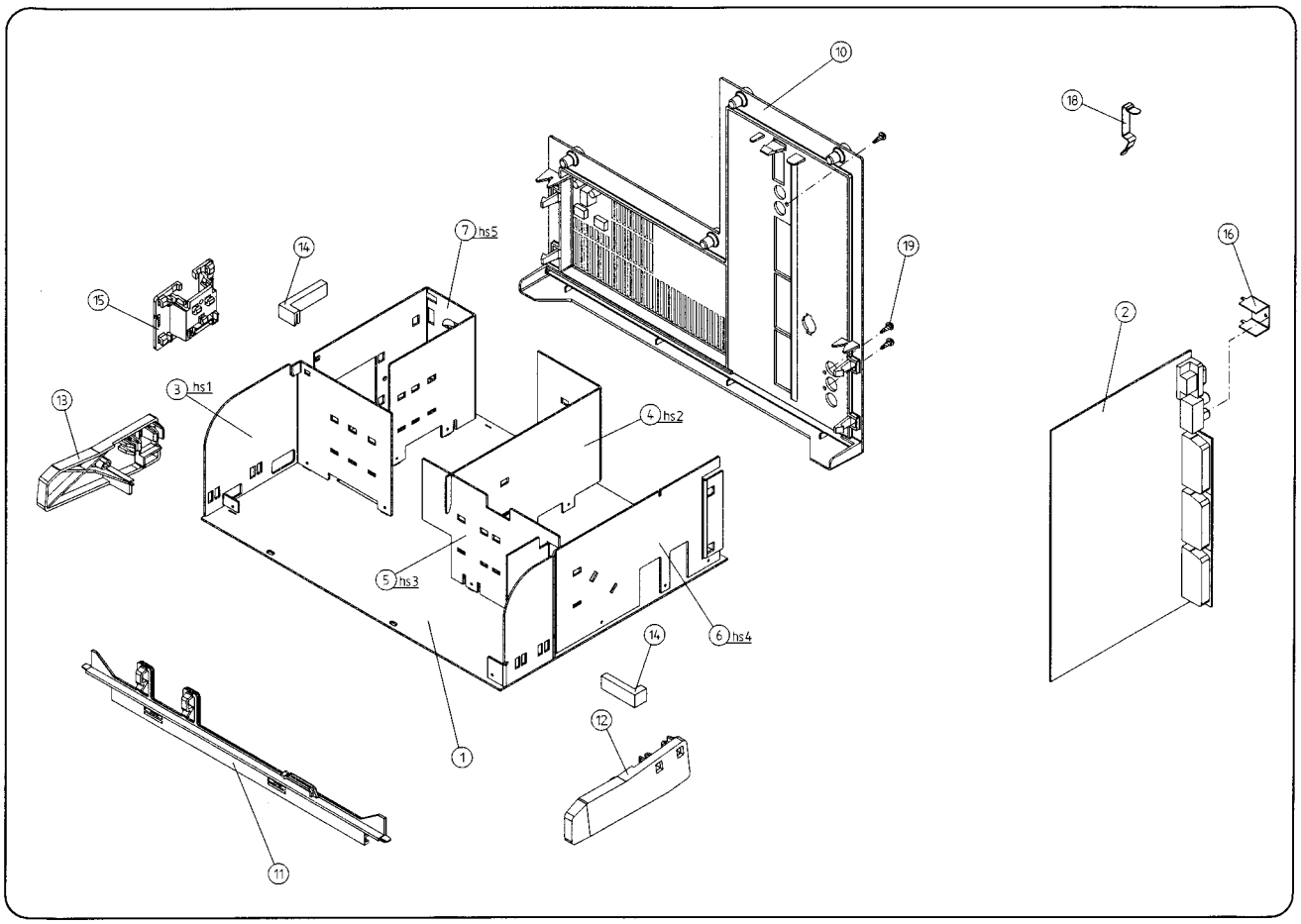

Item	Description	Order no.
	MODULES	
1	MAIN BOARD	TN/TW*****
2	SIGNAL MODULE	AV16*
	METAL PARTS	
3	HEAT SINK 1	84830830
4	HEAT SINK 2	84830910
5	HEAT SINK 3	84830920
6	HEAT SINK 4b	84830870
7	HEAT SINK 5	84830900
16	AV MODULE BRACKET	84481920
	PLASTIC PARTS	
10	COVER PLATE FOR CONNECTOR AREA	
	A (3 x SCART, VGA + AUDIO IN)	84401230
	- Universum FT7121	
	C (2 x SCART, NO VGA + AUDIO IN)	84401210
	- Universum FT7120	
11	WIRE HOLDER	84486070

Item	Description	Order no.
12	CHASSIS HOLDER LEFT	80409535
13	CHASSIS HOLDER RIGHT	80409559
14	CONNECTING PIECE	84488881
15	CONNECTING PLATE 28"	84488470
	SPRINGS, SCREWS	
18	HEAT SINK SPRING	79400021
19	PT-SCREW KB30x8 (2 AUDIO OUT, 1 AUDIO IN)	78360002

Mechanical parts 28" V3 FT7120 Prod.-Nr. 867.510 0

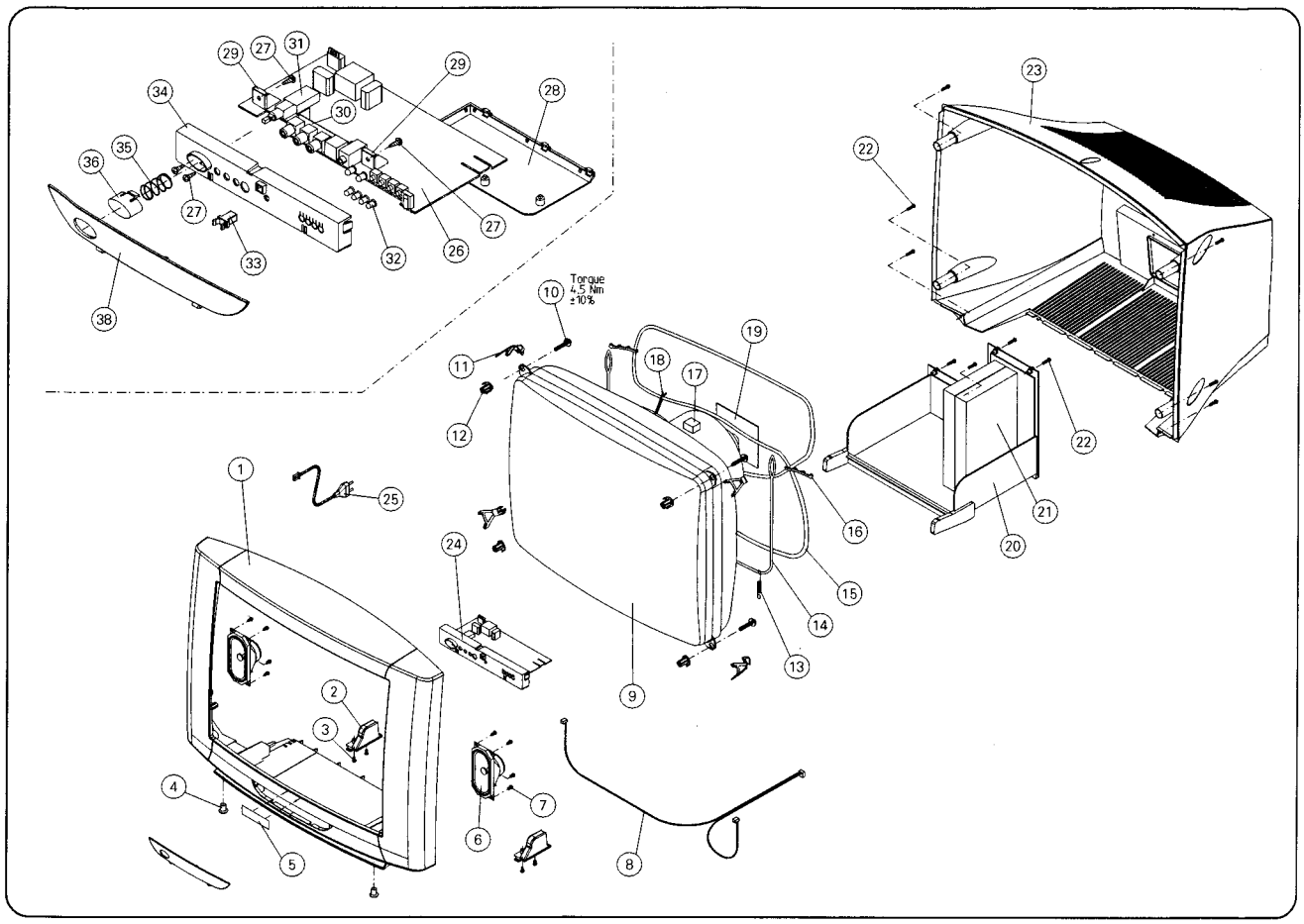

Item		Description	Order no.
1	⚠	CABINET V-0 28V3 POLAR SILVER	85101500
2		CHASSIS BRACKET	84488920
3		PT-SCREW KB 40X10 FOR CHASIS BRACKET	WC0353
4		FOOT PAD 14.6mm NATURA	80424027
5		BADGE UNIVERSUM	66390050
6		LOUDSPEAKER 57X126mm 8 10W	43120022
7		PT-SCREW KB 40X10 FOR LOUDSPEAKERS	WC0353
8		LOUDSPEAKERS WIRE BUNDLE	96010145
9	⚠	PICTURE TUBE Phi A66EAK075X44 100Hz AK	43642849
10		PT-SCREW 7X30 FOR PICTURE TUBE	62034039
11		DEGAUSSING COIL HOLDER	84488950
12		PICTURE TUBE HOLDER	84480810
13		GROUNDING SPRING	81401082
14		GROUNDING WIRE	96010090
15	⚠	DEGAUSSING COIL	45820039
16		DEGAUSSING COIL HOLDER	84488790
17		FELT PAD	80440385
18		DEGAUSSING COIL TIGHTENER	80424133
19	⚠	CRT MODULE	HH203
20	⚠	CHASSIS	TNBRAAA
21		SIGNAL MODULE	AV165
22		PT-SCREW KB 40X20	WC0354
23	⚠	BACK COVER V-0 28V3 LIGHT GREY	83303930
24		CONTROL UNIT	SY126

Item		Description	Order no.
25	⚠	MAINS CABLE +CONNECTOR 2.25m	70003769
26		CONTROL UNIT MODULE	FC110
27		PT-SCREW KB30X8	WC0371
28	⚠	FIRE BARRIER FOR CONTROL UNIT	84860450
29		MODULE SUPPORT	81408167
30	⚠	COVER FOR CAMERA CONNECTOR	84488890
31	⚠	MAINS SWITCH 250V 6/120A	41210011
32		PUSH BUTTON	63157040
33		FLAP LOCK	80413473
34		CONTROL UNIT FRAME	84451260
35		COMPRESSION SPRING	UC3051
36		MAINS BUTTON	84680830
38		FLAP V3 100Hz Safety++	84501700
		EXTENSION FOR MAINS BUTTON	84680760
	⚠	WIRE BUNDLE V-DEFLECTION 550mm	96008120
	⚠	WIRE BUNDLE H-DEFLECTION	96010059
	⚠	ANODE CABLE 570mm +CHIMNEY	96008868
	⚠	FOCUS CABLE 1,2 410MM	96010230
	⚠	DST CABLE 280MM	96011091
		PIP MODULE	PP160
		REMOTE CONTROL UNIVERSUM	RCU100
		BATTERY COVER	84433430

Mechanical parts 32" X6 FT7121 Prod.-Nr. 528.112 6

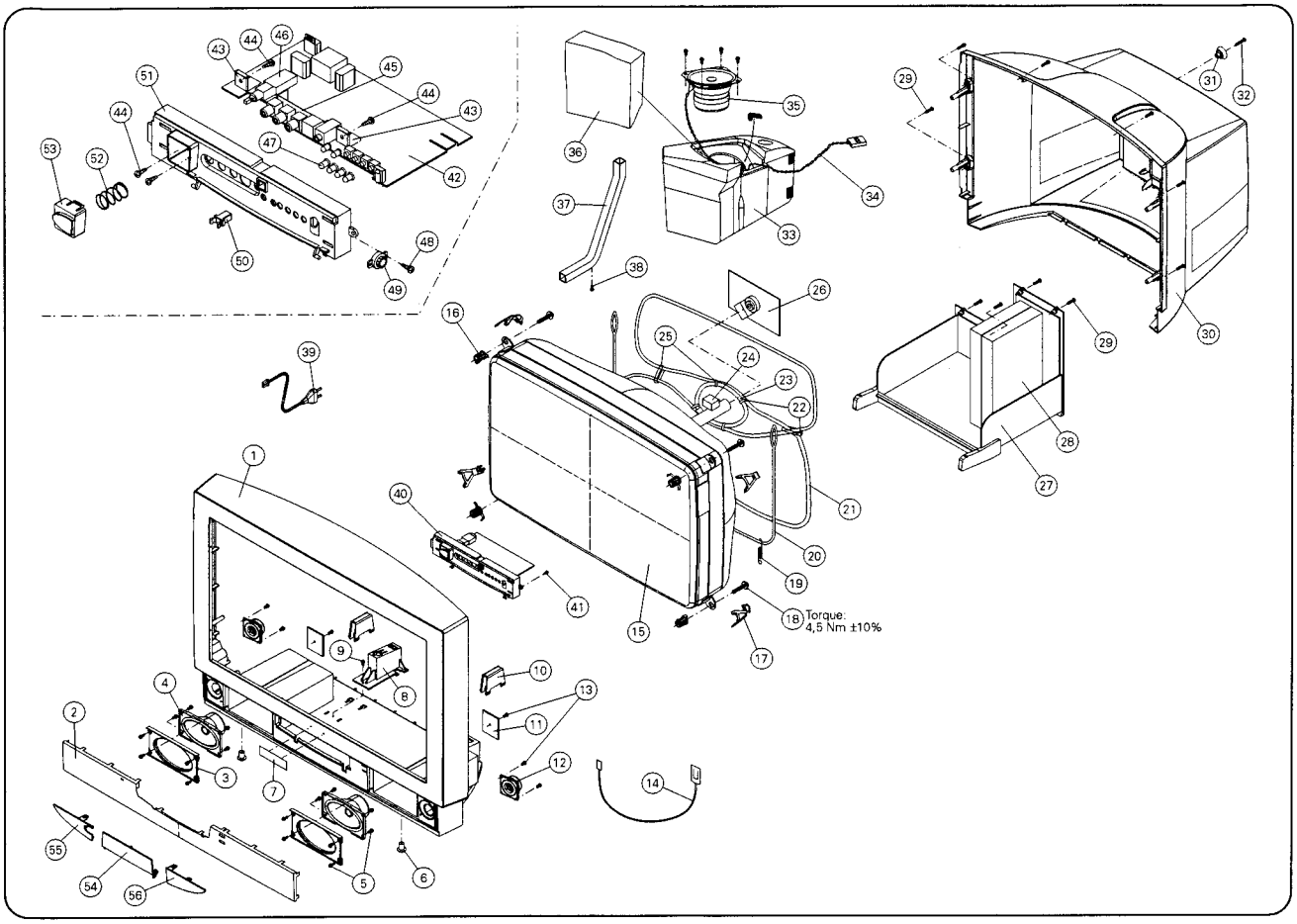

Item		Description	Order no.
1	⚠	CABINET V-0 32X6 POLAR SILVER	8201810A
2		GRILL 32	84603880
3		LOUDSPEAKER MOUNTING PLATE	84401200
4		LOUDSPEAKER 70X130 8	43120005
5		PT-SCREW KB40X10	WC0353
6		FOOT PAD 14.6mm NATURA	80424027
7		BADGE UNIVERSUM	66390050
8		CHASSIS BRACKET	84488820
9		PT-SCREW KB40X8 FOR CHASSIS BRACKET	WC0368
10		CHASSIS HOLDER	84488440
11		CROSSOVER NETWORK	AJ106
12		TWEETER 51X51 8	33004365
13		PT-SCREW KB40X8	WC0368
14		GROUNDING WIRE FOR GRILL	96010210
15	⚠	PICTURE TUBE Phi W76ERF042X044 100Hz TF*	43643212
16		PICTURE TUBE HOLDER	84480810
17		DEGAUSSING COIL HOLDER	84488950
18		PT-SCREW 7X40 FOR PICTURE TUBE	WC2027
19		GROUNDING SPRING	81401082
20		GROUNDING WIRE	96010091
21	⚠	DEGAUSSING COIL	45820038
22		WIRETIE 190MM	65221205
23	⚠	COMPENSATION COIL 220mm	45820005
24		FELT PAD	80440385
25		DEGAUSSING COIL TIGHTENER	80424133
26	⚠	CRT MODULE	HH201
27	⚠	CHASSIS	TWARCAA
28		SIGNAL MODULE	AV163
29		PT-SCREW KB 40X20	WC0354
30	⚠	BACK COVER V-0 32X6 LIGHT GREY	84303790
31		PLUG FOR SUBWOOFER MOUNTING	UL0104
32		PT-SCREW KB 40X40 FOR SUBWOOFER MOUNTING	WC0429
33		SUBWOOFER V-0	SCE076
34		SUBWOOFER WIRE BUNDLE	96008820
35		SUBWOOFER LOUDSPEAKER 8 15W	43120024
36		DAMPER	UA1668
39	⚠	MAINS CABLE +CONNECTOR 2.25m	70003769
37		SUBWOOFER BOX HOLDER	81408105
40		CONTROL UNIT	SY122
38		SCREW 5X9.5 FOR SUBWOOFER MOUNTING	WC0308
41		PT-SCREW KB 35X12, BLACK	62039239
42		CONTROL UNIT MODULE	FC110
43		MODULE SUPPORT	81408167
44		PT-SCREW KB30X8	WC0371
45	⚠	COVER FOR CAMERA CONNECTOR	84488890
46	⚠	MAINS SWITCH 250V 6/120A	41210011
47		PUSH BUTTON	63157040
48		PT-SCREW KB25X8	78360040
49		FLAP DAMPER	84488870
50		FLAP LOCK	80413473
51		CONTROL UNIT FRAME	84461180
52		COMPRESSION SPRING	UC3051
53		MAINS BUTTON	84680770
54		FLAP X6 Safety++	84501610
55		LENS LEFT SIDE	84553550
56		LENS RIGHT SIDE	84553590
		PICTURE TUBE SUPPORT	84489040
		EXTENSION FOR MAINS BUTTON	84680760
		LOUDSPEAKERS WIRE BUNDLE	96010145
	⚠	WIRE BUNDLE V-DEFLECTION 550mm	96008120
	⚠	WIRE BUNDLE H-DEFLECTION	96010059
	⚠	ANODE CABLE 630mm + CHIMNEY	96008869
	⚠	FOCUS CABLE 410mm	96010220
	⚠	FOCUS CABLE 1,2 410MM	96010230
		PIP MODULE	PP160
		REMOTE CONTROL UNIVERSUM	RCU100
		BATTERY COVER	84433430

* **PLEASE NOTE:**
DO NOT ADJUST THE POTENTIOMETERS ON THE CONVERGENCE CORRECTION MODULE OF THE PHILIPS TRUE FLAT PICTURE TUBE (TYPES W66ERF & W76ERF). ADJUSTMENT OF THESE POTENTIOMETERS WILL VOID THE WARRANTY FOR THE PICTURE TUBE.

* **BEACHTEN SIE BITTE:**
DIE POTENTIOMETER DES KONVERGENZ-KORREKTIONSMODULES DER PHILIPS "TRUE FLAT"-BILDRÖHRE (TYPEN W66ERF & W76ERF) DÜRFEN NICHT VERSTELLT WERDEN. BEI VERSTELLUNG DIESER POTENTIOMETER ERLÖSCHEN DIE GARANTIEANSPRÜCHE AUF DIE BILDRÖHRE.

Notes

TP2
5V/div 2ms/div

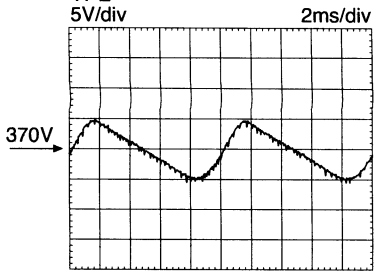

TP4
100V/div 5ms/div

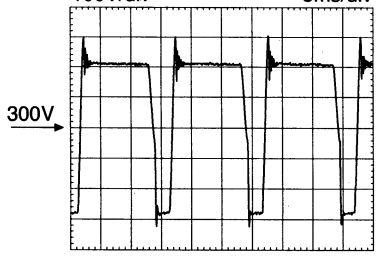

TP5
2V/div 5µs/div

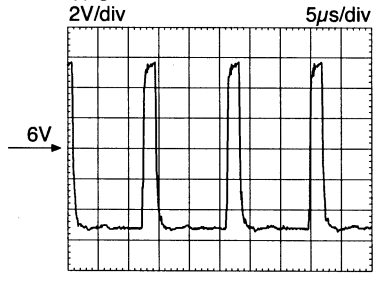

Video signal (CVBS or Y)
Chroma signal
Sound IF signal
Audio signal (L)
Audio signal (R)
Subwoofer signal
RGB or UV signal
Horizontal deflection signal
Vertical deflection signal
E-W raster correction signal

TP6
500mV/div 5µs/div

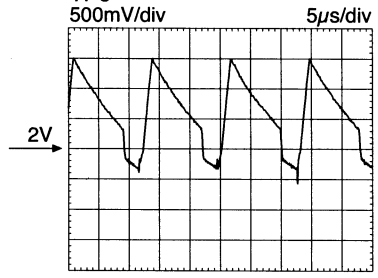

* not used
** version component
⚠ safety component, must be replaced only with original parts.

TP7
500mV/div 5µs/div

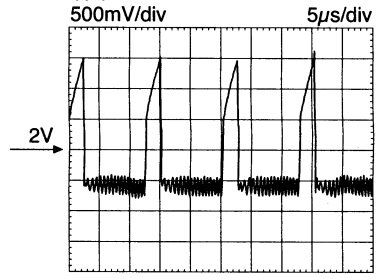

TP8
1V/div 5µs/div

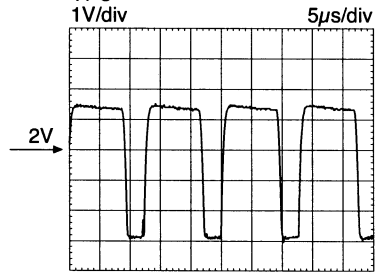

TP9
200mV/div 5µs/div

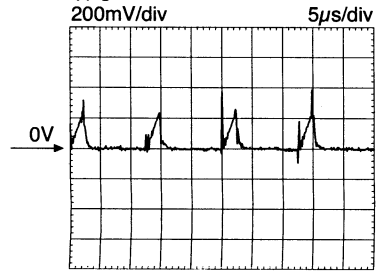

TP10
20V/div 5µs/div

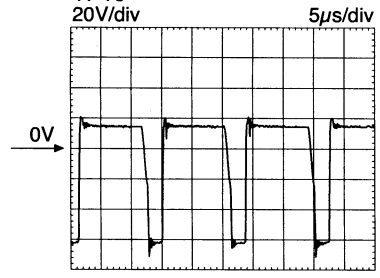

TP11
500mV/div 10µs/div

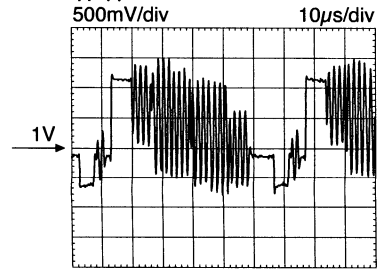

VERSION 9

CHASSIS MC2B SERIES 100Hz

66117321

TU1 FQ1216ME/IV-3

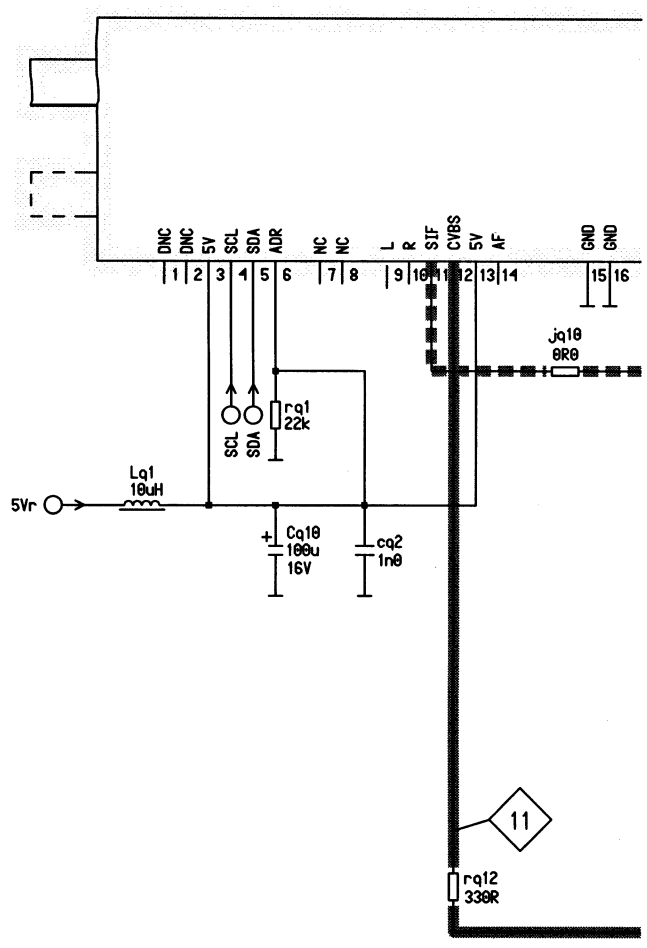

FC110
(CONTROL UNIT MODULE)

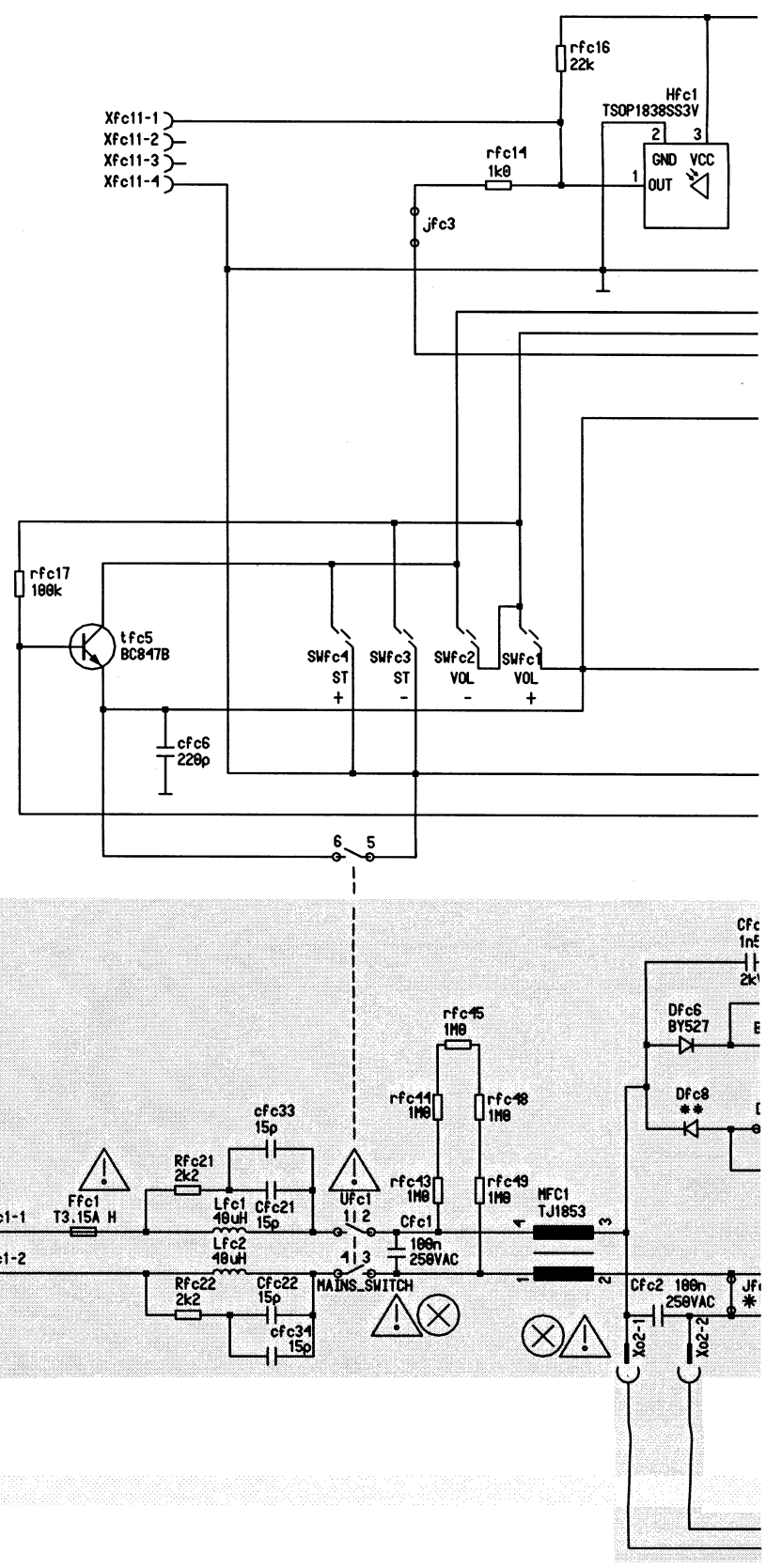

PP160
(PICTURE IN PICTURE MODULE)

TA100
(AUDIO LINE OUTPUT MODULE)

MAINS NON ISOLATED

MAINS ISOLATED

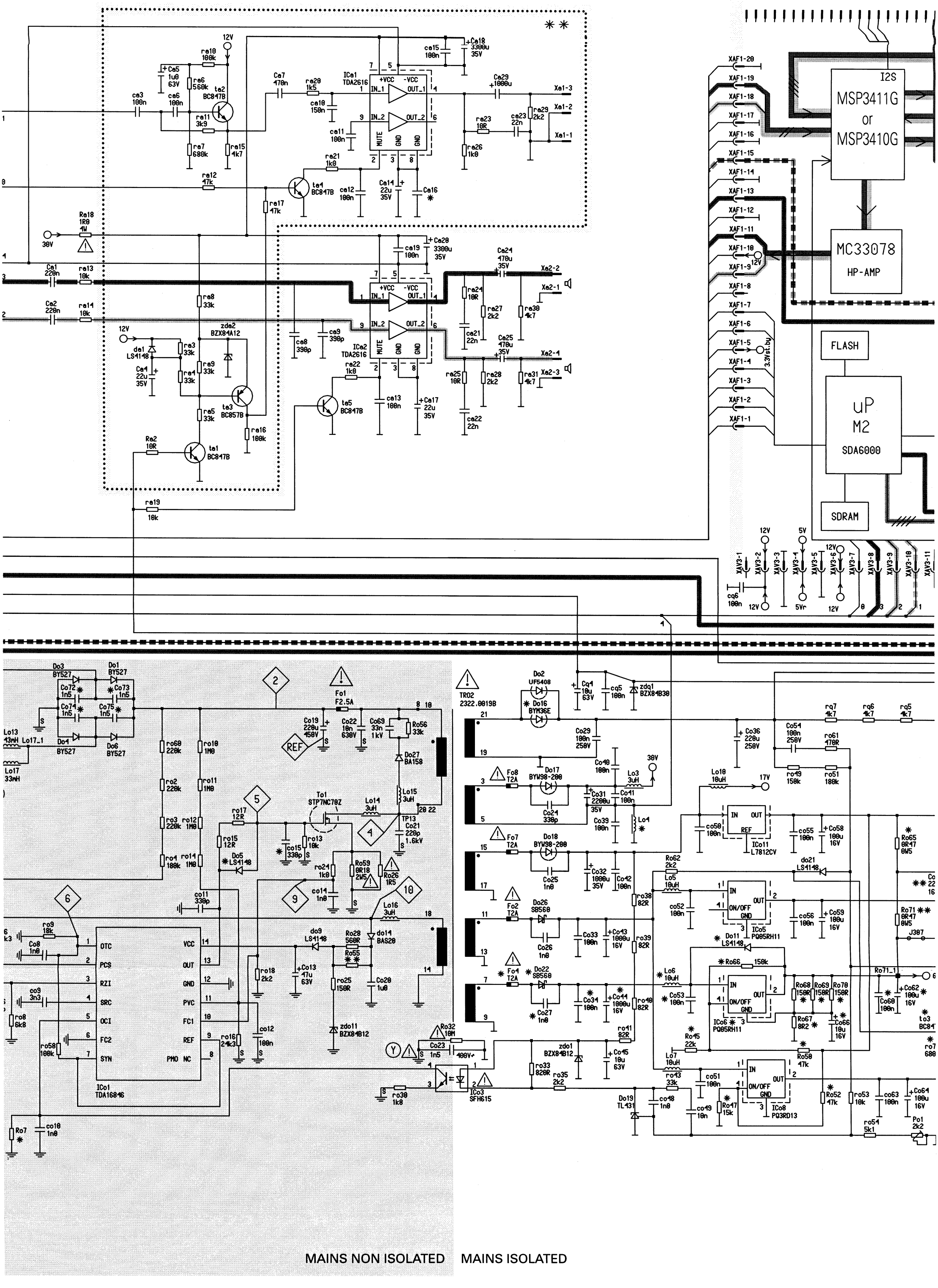
MSP3411G
or
MSP3410G
I2S
MC33078
HP-AMP
FLASH
uP
M2
SDA6000
SDRAM
TDA16846
TDA2616
BC847B
BC857B
BC848B
STP7NC70Z
SFH615
TL431
MAINS NON ISOLATED
MAINS ISOLATED

AV16x
(SIGNAL MODULE)

XAD1
E1
XAV4
E2
XAV5
E3
XAV6
XAV7
EXT
L/R IN
XAV8
XAH1
Xh2-
Xh2-

ITU_656
VSP94x7B
ITU_DS656
DDP3315C

G

XAV3-12 XAV3-13 XAV3-14 XAV3-15 XAV3-16 XAV3-17 XAV3-18 XAV3-19
XAV2-1 XAV2-2 XAV2-3 XAV2-4 XAV2-5 XAV2-6 XAV2-7 XAV2-8 XAV2-9 XAV2-10 XAV2-11 XAV2-12 XAV2-13 XAV2-14 XAV2-15 XAV2-16 XAV2-17 XAV2-18 XAV2-19
XAV1-1 XAV1-2 XAV1-3 XAV1-4 XAV1-5 XAV1-6 XAV1-7 XAV1-8 XAV1-9

3V3
Cq8
Cq9
Lq3
Lq4
5Vp
SCL
SDA

26 28 29

rk15 5k1

Rk35 10k
Rk36 10k
RK26 5k6
Rk27 100k
Rk34 1k0
Tk7 BC857B
Rk24 10k
Dk1 TL431
Rk23 0R0
Ck7 470n
Rk25 0R0
rk69 1M0
rk16 15k
rk84 10k
dk2 LS4148
zdk11 BZX84C2V4
RK28 110k
Rk29 110k
Rk21 1M0
Rk19 220k
Tk5 BC857B

rq1 4k7
rq3 4k7

6V
rs30 0R0
12V
rs6 4k7
rs19 2k2
ts3 BC847B
Rs20 33R
Xs2-4
Xs2-3
Xs2-2
Xs2-1
15
rs7 15k
J316
cs9 22n
rs29 18k
ts1 BC847B
cs2 100n
ts2 BC857B
ts4 BC857B
16:9 PICTURE TILT

ck2 10n
Rk81 39k
rk6 2k2
rk9 430R
rk11 10k
27

12V
Xq2-2
Xq2-1
co65 100n
Xq1-1 Xq1-2 Xq1-3 Xq1-4 Xq1-5 Xq1-6
J308
5Vr
5Vp
ro73 51k
Ro74 51k
Co71 4n7 250V
Ro75 51k
17V
ro72 4k7
co70 10n
to4 BC847B
ro76 560R

VERT.DEFL.COIL
Xs1-3
Xs1-2
Xs1-1

rs21 10k
ts6 BC857B
21
rs25 6k8
cs11 10n
ts10 BC857B
22
cs12 10n
12V
ts5 BC857B
rs31 33k
rs23 12k1
rs32 33k NTC
ts9 BC857B
rs27 5k1
rs24 5k1
rs26 6k8
rk99 8k2
Rk96
rk100 2k2
ts8 BC857B
ts7 BC857B
rs22 47k
OUT_J304
+Ck3 220u 25V

rk101 39k
Zdk7
Rk98
Rk98_1
Zdk1
Rk2
Rk2_1
RK104
rk4 100k
dk1 LS4148
ck41 10n
rk1 100R
ck1 220p
tk1 BC857B
rk3 2k7
rk5 2k7
rk10 2k7
rk12 2k7
rk13 3k3
tk2 BC857B
zdk5 BZX84C2V4
zdk4 BZX84C51V
24
rk102 82k
ck42 100n
tk19 BC847B
Rk97
rk7 10k
Tk3 2SD2012
Ck4 1u5
Lk4 3uH

30
zdk3
17V
Rk22 2R2
Ck6 220u 25V
rk18 150R
Ck5 100n
rk20 10R
31
tk4 BC857B
dk3 LS4148
dk21 LS4148
5Vp

guard
INPUT
FEEDBACK
COMP
rs1 2k2
Rs3 1R54
Rs5
Rs8
rs2 1k5
ds1 LS4148
20
18
19
Cs3 47n
Cs1 100n
Cs4 10n
+Cs7 47u 63V
rs4 270k
Rs28
Cs5 470n
rs10 12R
rs11 12R
cs6 100n
cs10 10n
cs8 10n
16
17
Rs12
Rs13
Rs14
Rs15
Rs16
Rs17
Rs9
ICs1
TDA8354

HH2xx
(CRT MODULE)

77

ICh1 TDA6111 ICh2 TDA6111 ICh3 TDA6111

CRT2 CRT1

** SOh2 CRT CONN

Phi 32" SF
Phi 32" TFL
Phi 28" TFL
Sam 29" TFL

R G B f f FGND

29kV EHT

FOCUS DYN. FOCUS

** SOh1 CRT CONN

** Optional line c

UG2 UG2

TRK2 TRK3

HXkt1 HXkt3 HXkt7

HORIZONTAL YOKE

Xk3-1 Xk3-2 Xk3-3 Xk3-4 Xk3-5

TRk1 545 0120 400

TRk5 67uH/17uH

Th1 BF422 Th2 BC857B th3 BC847B Th4 2SA1837 th5 BC857B th6 BC857B th7 2SC4793 tk6 BC847B tk8 BC637 tk9 BC857B tk25 BC847B Tk8 BC637 Tk10 BUK457-400 Tk11 BF422 Tk12 BU2525AF Tk13 BC327-25

zdk6 BZX84C12 zdk10 BZX84B12

Dh1 BYW36C Dh2 BYW36C Dh3 BAS16 Dh5 BAS16 Dh6 BAV103 Dh7 BAV103 Dh8 BAV103 Dh9 BAV103 Dh10 BAV103 Dh11 BAV103 Dh1 BAS16 Dh12 LS4148 Dh13 LS4148 Dk5 LS4148 dk6 LS4148 Dk7 BT137_600 Dk9 BYV36C Dk11 1N4937 Dk12 BYV36C Dk13 BYW98-200 Dk14 1N4937 Dk15 BYV26C Dk16 BYM357X Dk19 1N4937 Dk22 BYV26C

Th1 BF422 Th2 BC857B th3 BC847B Th4 2SA1837 th5 BC857B th6 BC857B th7 2SC4793 tk6 BC847B tk8 BC637 tk9 BC857B tk25 BC847B Tk8 BC637 Tk10 BUK457-400 Tk11 BF422 Tk12 BU2525AF Tk13 BC327-25

zdk6 BZX84C12 zdk10 BZX84B12

Dh1 BYW36C Dh2 BYW36C Dh3 BAS16 Dh5 BAS16 Dh6 BAV103 Dh7 BAV103 Dh8 BAV103 Dh9 BAV103 Dh10 BAV103 Dh11 BAV103 Dh1 BAS16 Dh12 LS4148 Dh13 LS4148 Dk5 LS4148 dk6 LS4148 Dk7 BT137_600 Dk9 BYV36C Dk11 1N4937 Dk12 BYV36C Dk13 BYW98-200 Dk14 1N4937 Dk15 BYV26C Dk16 BYM357X Dk19 1N4937 Dk22 BYV26C

Xh1-1 Xh1-6 Xh3-1 Xh3-3 Xk6-1 Xk6-2 Xk6-3 Xk6-4 Xk6-5 Xk6-6 Xk8 Xk9

Lh1 10uH Lh6 10uH Lh7 10uH Lk1 Lk2 FJ1311 290uH Lk3 1.9mH Lk5 Lk6 Lk7 33nH

J303 R0 J315 J33 0R0

Xh4 3.0mm

TP48 TP203 TP208

HCk17_1 HCk23_1

5Vp

TRK2 TRK3

Rk132 Rk188 2R2 Rk105 47R Rk107 10k

Rk79 Rk8 15k Rk78 10M Rk83 390R/1W

Ck28 220n Ck36 Ck38 47u 35V ck37 100n

Rk64 27R Rk76 2R2 Rk77 100k Rk78 100k

Rk72 Rk71 Rk73 Rk74 Rk75 1R5 0W5

Rk72_1 Rk66 0R47 0W5 Rk67 6k8 Rk68 0R1 Rk65 6k8

Rk55 0R22 Rk63 0R1 Rk50 0R47 Rk58 0R33 Rk62 27R

Rk30 Rk45 220R Rk52 100k Rk53 100k Rk56 2k7 Rk57 2k7 Rk59 100k Rk61 100k

Rk135 10k Rk134 10k Rk49 1k0 Rk48 470R Rk82 2k2 Rk51 2k2 Rk54 4k7

Rk33 2k0 Rk38 2k0 Rk39 2k0 Rk42 2k0 Rk46 820R Rk47 820R

Rk26 33k Rk27 4M7 Rk28 1k5 Rk33 1k5 Rk36 100k Rk37 2k2

Rkxx1

Ck8 100u Ck10 220n Ck12 100u 16V Ck13 330p Ck14 47u 63V Ck15 2200u 25V Ck16 22n Ck17 330n 250V Ck18 Ck19 4u7 250V Ck20 100n 250V Ck21 2n2 Ck22 330p Ck23 330n 250V Ck24 470p 1.6kV Ck25 15n Ck26 Ck27 Ck29 Ck30 470n Ck31 Ck32 Ck33 Ck34 Ck37 100n

Ch1 16V Ch2 Ch3 Ch4 Ch5 Ch6 Ch7 Ch8 Ch9 22n Ch11 Ch12 Ch13 Ch14 Ch16 Ch17 4u7 250V Ch18 10u 250V Ch19 22n Ch22 8n2 Ch27 10u 63V Ch28 100u 16V Ch29 10u 63V Ch31 47u 63V Ch32 100n Ch33 100n Ch34 100n Ch36 22n Ch37 100n Ch38 22n Ch39 100n Ch41 680p Ch42 47p Ch46 4n7

Rh1 68K Rh2 1k0 Rh3 0R0 Rh10 1M0 Rh12 0R0 Rh13 68K Rh15 470k Rh16 0R0 Rh17 68K Rh18 470R Rh19 470R Rh21 470R Rh22 470R Rh23 470R Rh24 470R Rh31 68R Rh32 Rh33 1k5 Rh36 100k Rh37 2k2 Rh38 470R Rh39 1k0 Rh40 100R Rh41 6k8 Rh42 330R Rh43 3R3 Rh44 330R Rh46 10R Rh47 18k Rh48 10R Rh49 18k Rh50 560R Rh51 220R Rh52 2k2 Rh53 6k8 Rh54 330R Rh56 3R3 Rh60 Rh64 270R

rh1 3k0 rh2 1k0 rh3 0R0 rh6 1k5 rh7 1k5 rh8 1k5 rh9 1k5 rh11 1k5 rh14 1k5 rh59 1k0 rh60 rh61 220R rh62 220R rh63 220R

Rkxx1

Zdh1

Ck41 Ck43 Ck44 Ck45 4u7 250V Ck46 4n7

Ck8 100u

Ck29

Ck30 470n

Ck31

Ck32

Ck33

Ck34

Ck36

Ck37 100n

Ck38 47u 35V

Ck41

Ck43

Ck44

Ck45 4u7 250V

Ck46 4n7

Ck8 100u

Ck29

Ck30 470n

Ck31

Ck32

Ck33

Ck34

Ck36

Ck37 100n

Ck38 47u 35V

Ck41

Ck43

Ck44

Ck45 4u7 250V

Ck46 4n7

Ch1 16V Ch2 Ch3 Ch4 Ch5 Ch6 Ch7 Ch8 Ch9 22n Ch11 Ch12 Ch13 Ch14 Ch16 Ch17 4u7 250V Ch18 10u 250V Ch19 22n Ch22 8n2 Ch27 10u 63V Ch28 100u 16V Ch29 10u 63V Ch31 47u 63V Ch32 100n Ch33 100n Ch34 100n Ch36 22n Ch37 100n Ch38 22n Ch39 100n Ch41 680p Ch42 47p Ch46 4n7

Rh1 68K Rh2 1k0 Rh3 0R0 Rh10 1M0 Rh12 0R0 Rh13 68K Rh15 470k Rh16 0R0 Rh17 68K Rh18 470R Rh19 470R Rh21 470R Rh22 470R Rh23 470R Rh24 470R Rh31 68R Rh32 Rh33 1k5 Rh36 100k Rh37 2k2 Rh38 470R Rh39 1k0 Rh40 100R Rh41 6k8 Rh42 330R Rh43 3R3 Rh44 330R Rh46 10R Rh47 18k Rh48 10R Rh49 18k Rh50 560R Rh51 220R Rh52 2k2 Rh53 6k8 Rh54 330R Rh56 3R3 Rh60 Rh64 270R

rh1 3k0 rh2 1k0 rh3 0R0 rh6 1k5 rh7 1k5 rh8 1k5 rh9 1k5 rh11 1k5 rh14 1k5 rh59 1k0 rh60 rh61 220R rh62 220R rh63 220R

Rkxx1

Zdh1

Rk30 Rk45 220R Rk52 100k Rk53 100k Rk56 2k7 Rk57 2k7 Rk59 100k Rk61 100k

Rk135 10k Rk134 10k Rk49 1k0 Rk48 470R Rk82 2k2 Rk51 2k2 Rk54 4k7

Rk33 2k0 Rk38 2k0 Rk39 2k0 Rk42 2k0 Rk46 820R Rk47 820R

Rk26 33k Rk27 4M7 Rk28 1k5 Rk33 1k5 Rk36 100k Rk37 2k2

Rkxx1

Rk64 27R Rk76 2R2 Rk77 100k Rk78 100k

Rk72 Rk71 Rk73 Rk74 Rk75 1R5 0W5

Rk72_1 Rk66 0R47 0W5 Rk67 6k8 Rk68 0R1 Rk65 6k8

Rk55 0R22 Rk63 0R1 Rk50 0R47 Rk58 0R33 Rk62 27R

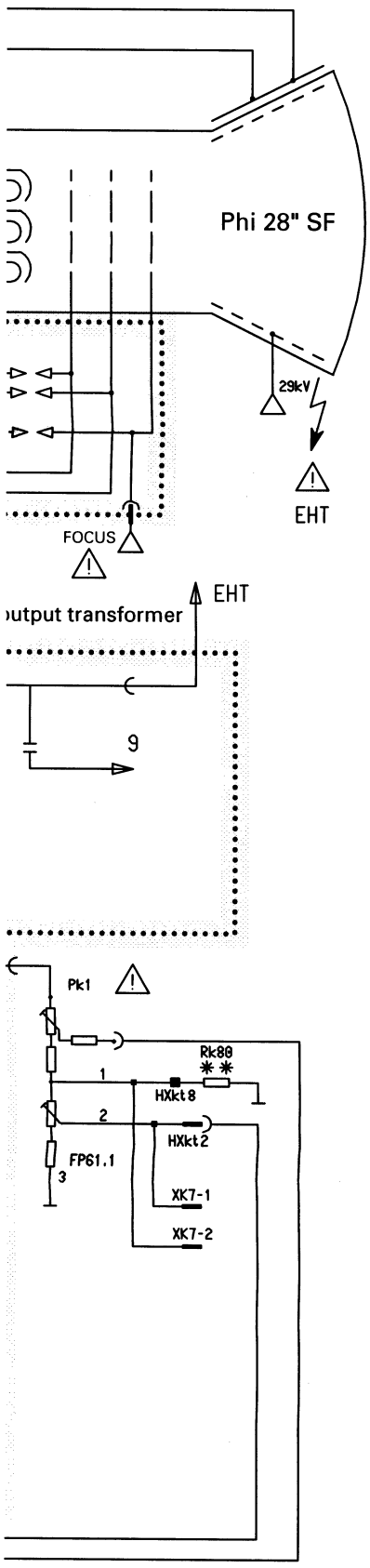

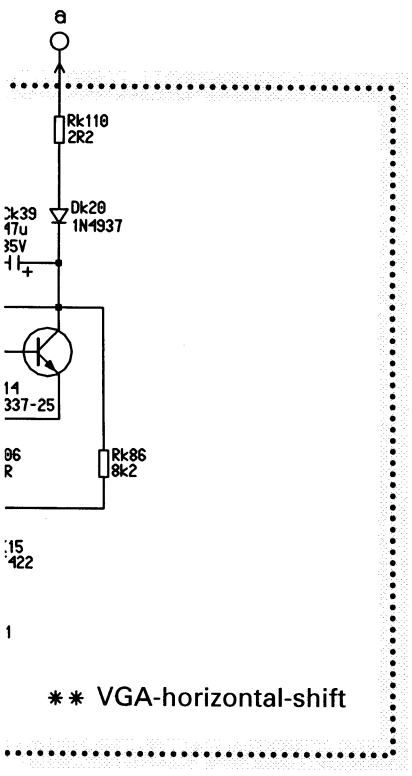

TP15 2H
2V/div
20µs/div
4V

TP26 2H
1V/div
10µs/div
3V

TP35 2H
200V/div
10µs/div
400V

TP43a 2V
50V/div
2ms/div
100V

TP16 2V
200mV/div
2ms/div
900mV

TP27 2H
10V/div
10µs/div
10V

TP36 2H
50V/div
10µs/div
0V

TP43b 2H
50V/div
10µs/div
100V

TP17 2V
200mV/div
2ms/div
900mV

TP28 2H
1V/div
10µs/div
3V

TP37 2H
100V/div
10µs/div
-200V

TP44a 2V
20V/div
2ms/div
40V

TP18 2V
2V/div
2ms/div
14,5V

TP29 2V
500mV/div
2ms/div
1,5V

TP38 2H
20V/div
10µs/div
120V

TP44b 2H
20V/div
10µs/div
40V

TP19 2V
10V/div
2ms/div
20V

TP30 2V
5V/div
2ms/div
37 V

TP39 2H
20V/div
10µs/div
40V

TP45 2H
200V/div
10µs/div
400V

TP20 2V
2V/div
2ms/div
4V

TP31 2H
5V/div
10µs/div
10V

TP40 2H
50V/div
10µs/div
100V

TP77 2H
20V/div
5µs/div
130V

TP21 2V
500mV/div
2ms/div
1,5V

TP32 2H
10V/div
10µs/div
20V

TP41 2H
5V/div
10µs/div
15V

TP22 2V
500mV/div
2ms/div
1,5V

TP33 2H
5V/div
10µs/div
0V

TP42a 2V
50V/div
2ms/div
100V

TP24 2V
5V/div
2ms/div
15V

TP34 2H
5V/div
10µs/div
0V

TP42b 2H
50V/div
10µs/div
100V

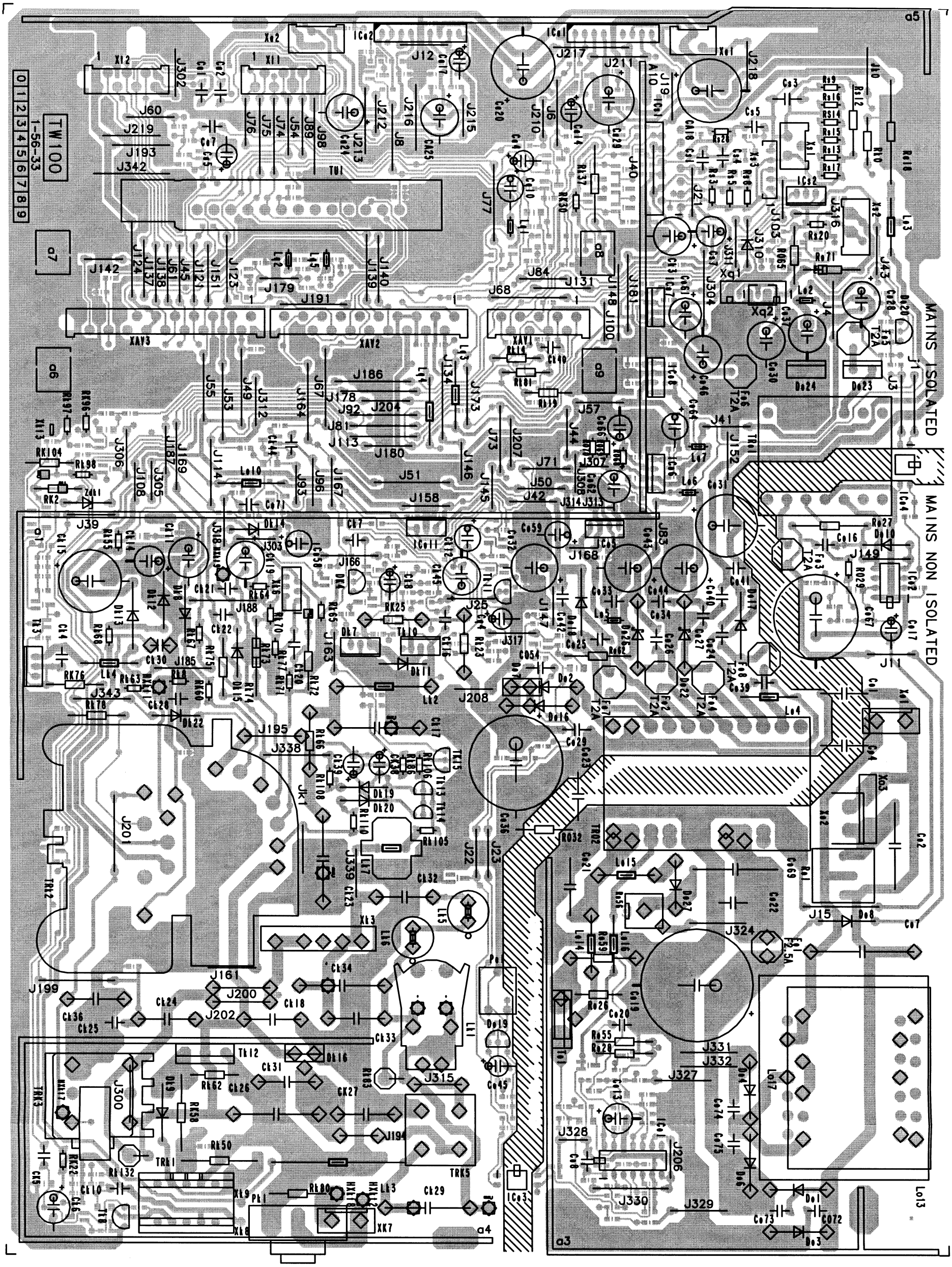

Griplet 1,9mm ⚠

VERSION 3

TN/TW CHASSIS MC2B SERIES 100Hz

66117322

90510643 1-56-13

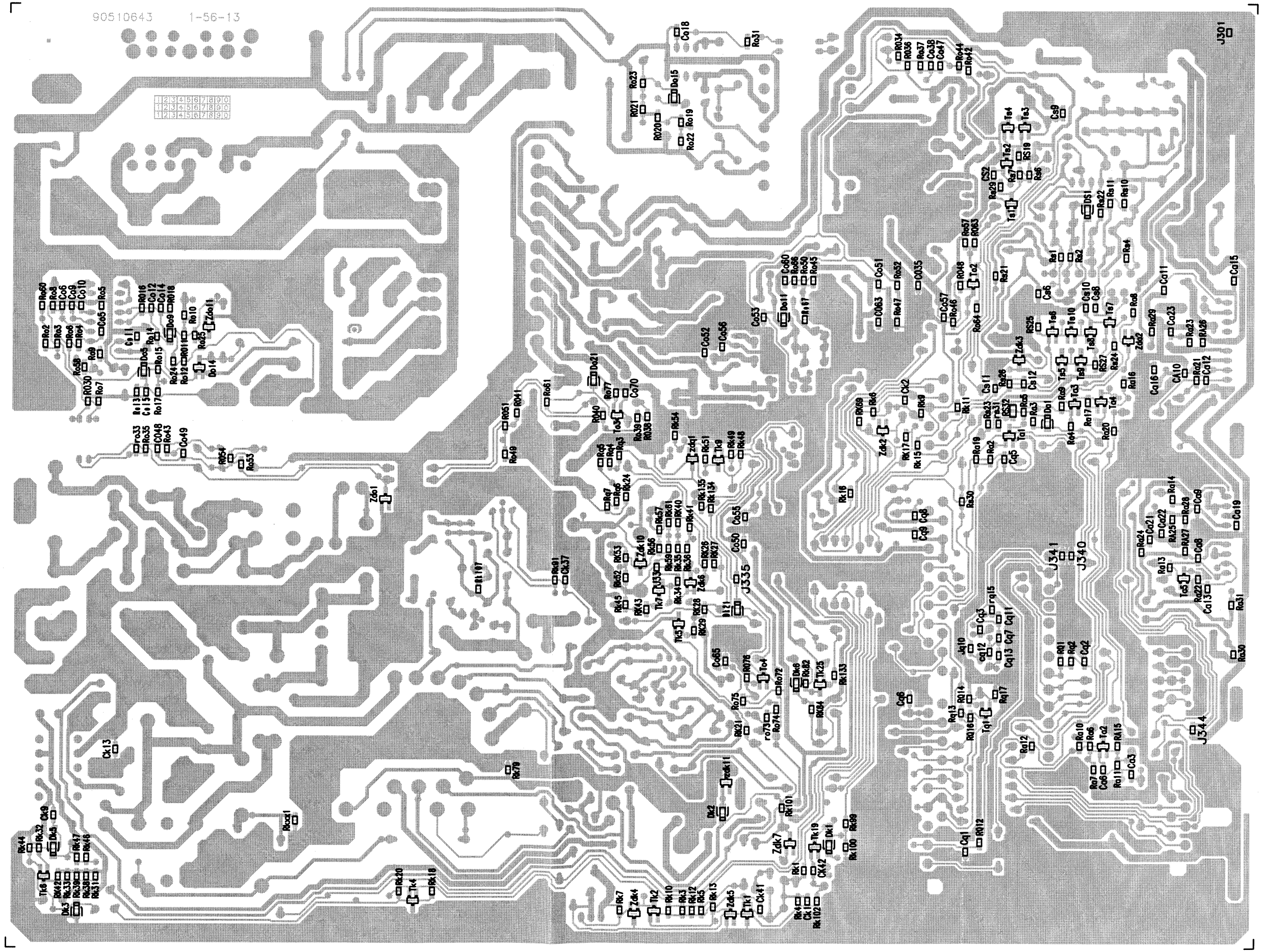

TP1a Scart 24 out copy from S-VHS
1V/div 10μs/div

TP1b Scart 24 out copy from S-VHS
500mV/div 10μs/div

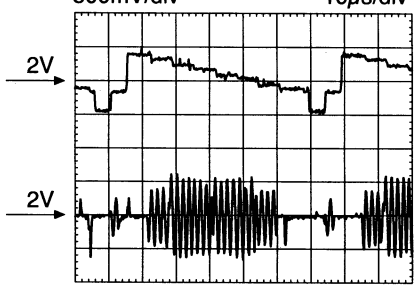

TP2 VSP XTAL
200mV/div 25ns/div

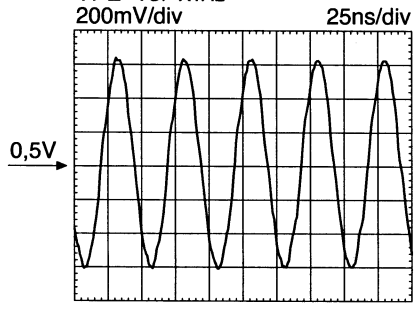

TP3 Y data
1V/div 5μs/div

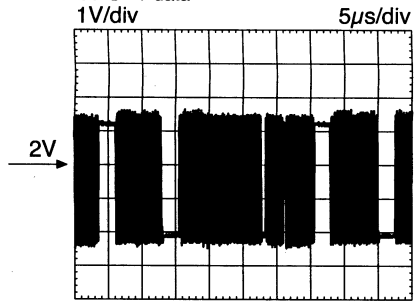

TP4 Main CVBS in
500mV/div 10μs/div

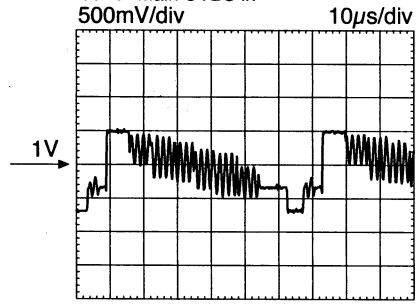

TP5a Scart 6 in
500mV/div 10μs/div

TP5b PiP CVBS
500mV/div 10μs/div

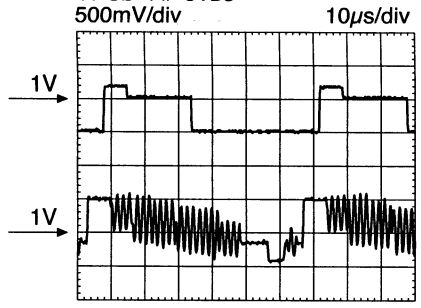

TP6 Mem CLK 100MHz
1V/div 5ns/div

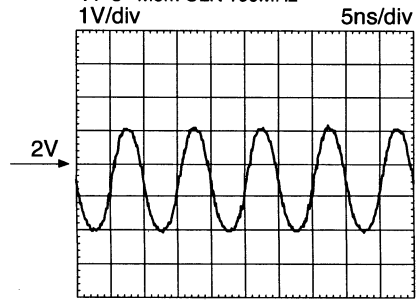

E3

E1

E3_RGB(1:3)

E1_RGB(0:3)

VGA_RGB(0:3)

LUMA(0:8)

ic2 VSP9407B

ic4 TDA8601T **

16MB_DRAM

64MB_DRAM

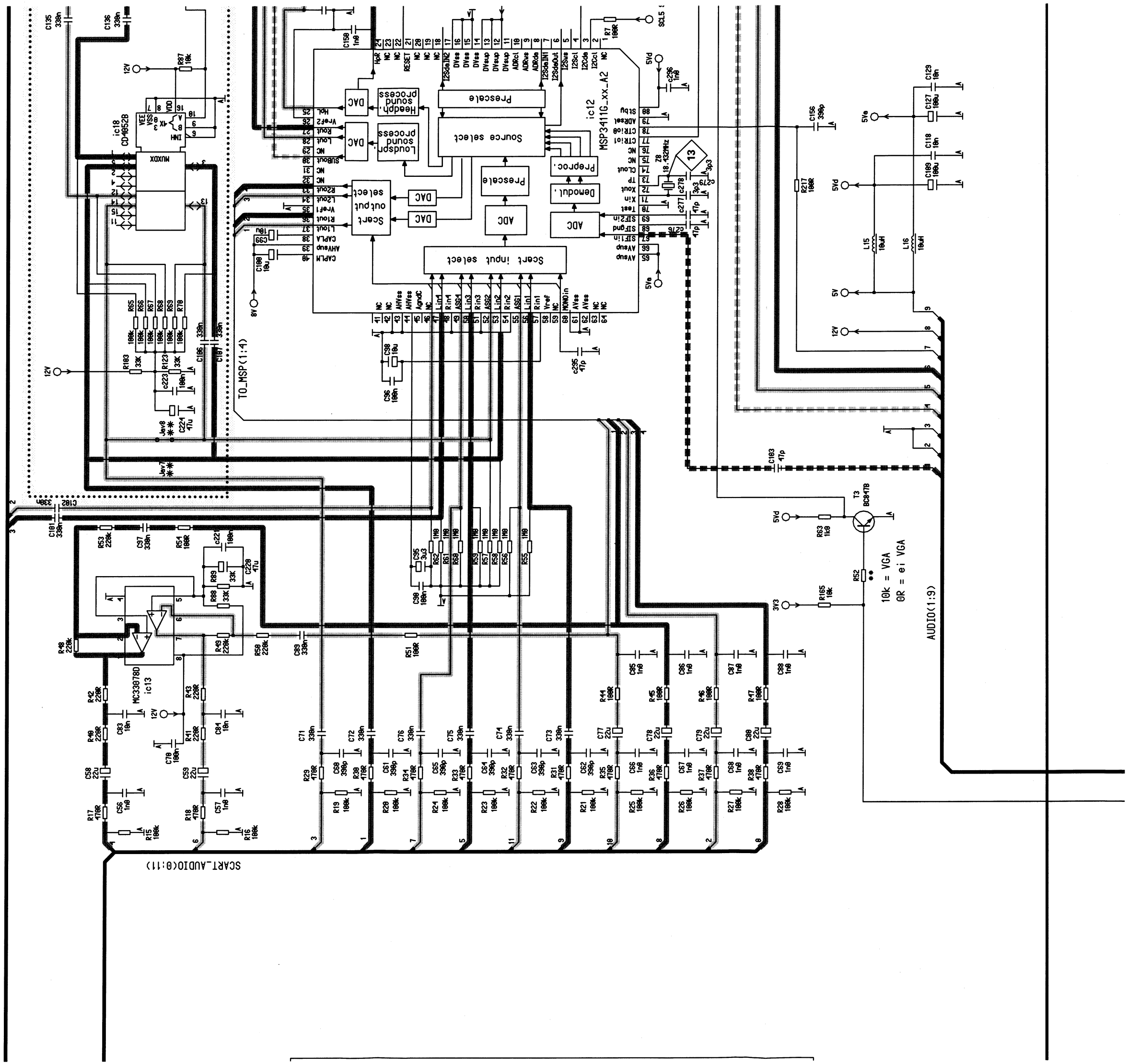

ic18
CD4052B
MUXDX
ic12
MSP3411G_xx_A2
Prescale
Source select
Preproc.
Demodul.
ADC
Scart input select
Scart output select
Loudspr. sound process
Headph. sound process
DAC
TO_MSP(1:4)
ic13
MC33078D
SCART_AUDIO(0:11)
AUDIO(1:9)
T3
BC847B
10k = VGA
0R = ei VGA

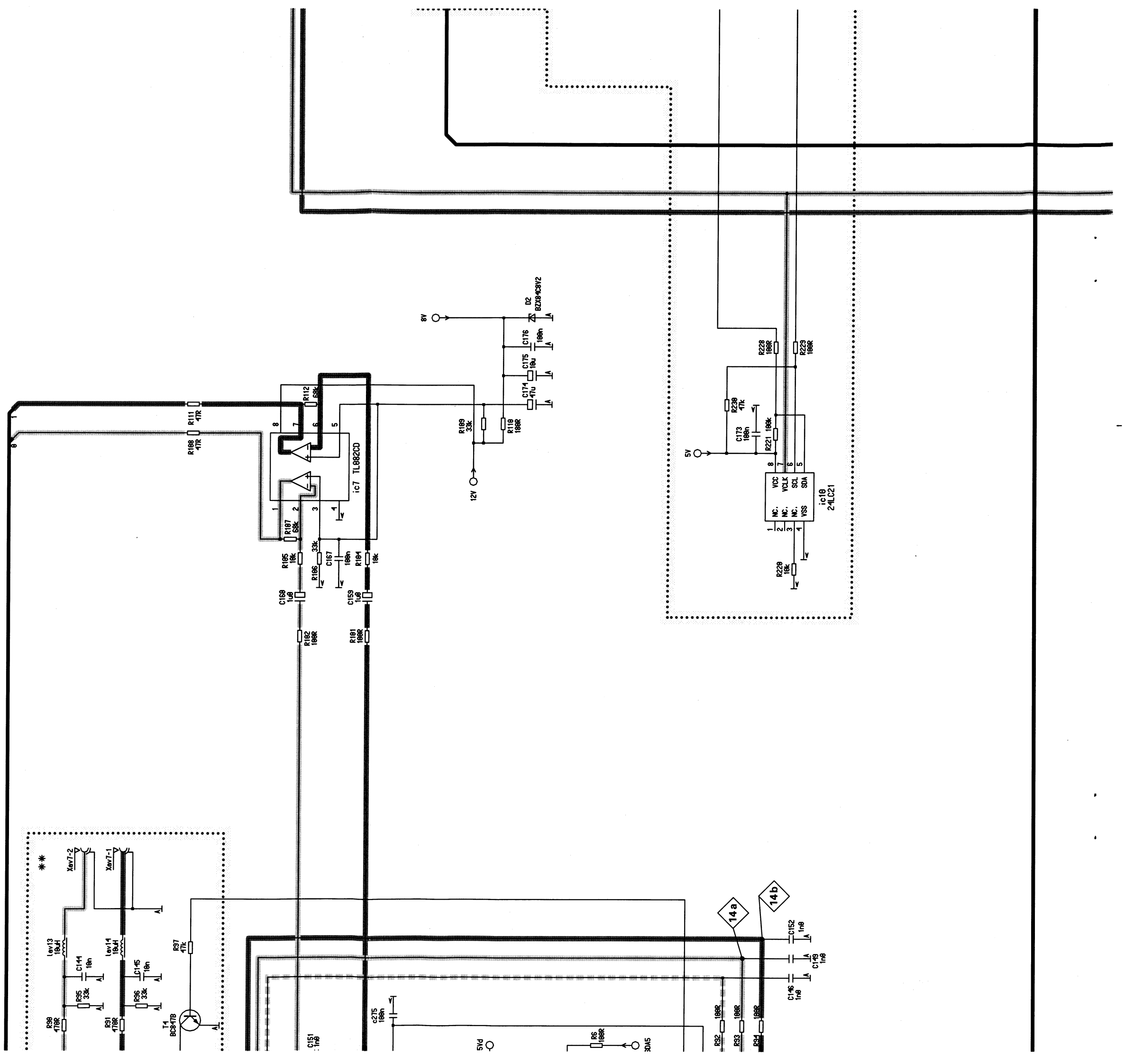
8V
D2
BZX84C8V2
C176
100n
C175
10u
C174
47u
R189
33k
R119
180R
12V
R112
68k
R111
47R
R188
47R
ic7 TL082CD
R187
68k
R165
18k
R166
33k
C167
100n
R164
18k
C169
1u0
C159
1u0
R102
100R
R101
100R
R228
100R
R229
100R
R230
47k
C173
100n
R221
100k
5V
ic10
24LC21
VCC
VCLK
SCL
SDA
NC.
NC.
NC.
VSS
R220
10k
**
Xav7-2
Xav7-1
Lav13
10uH
Lav11
10uH
C144
10n
C145
10n
R95
33k
R96
33k
R90
470R
R91
470R
R37
47k
T-1
BC847B
14a
14b
C152
1n0
C149
1n0
C146
1n0
C275
100n
C151
1n0
R6
100R
5Vd
3DA5
R32
100R
R33
100R
R34
100R

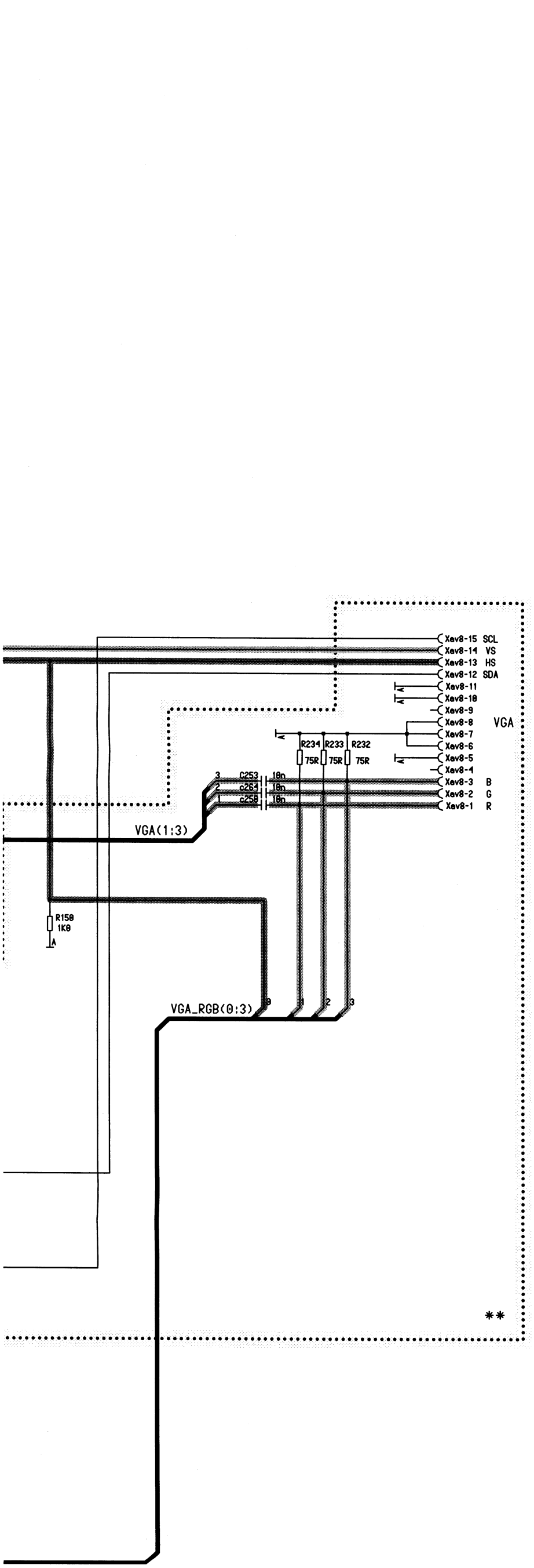

TP13 MSP Xtal
1V/div 20ns/div

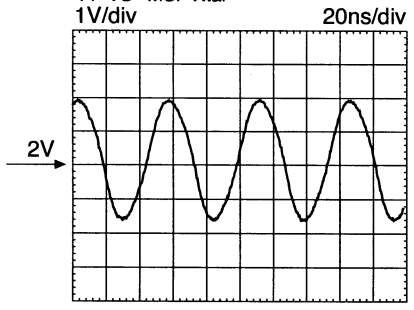

TP14a L 3KHz
1V/div 500μs/div

TP14b R 1KHz
1V/div 500μs/div

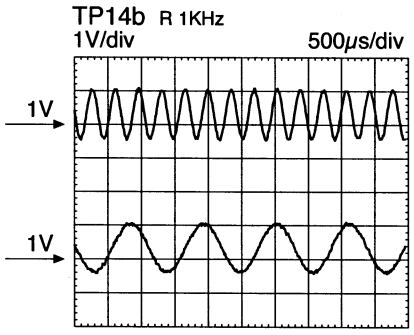

TP16 Hor sync.
1V/div 10μs/div

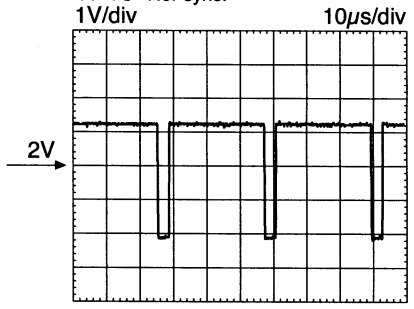

TP17 CLK 54MHz
1V/div 5ns/div

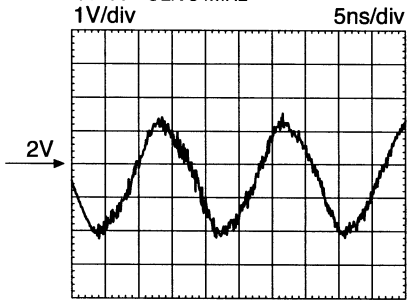

TP18 Vert. sync
1V/div 5ms/div

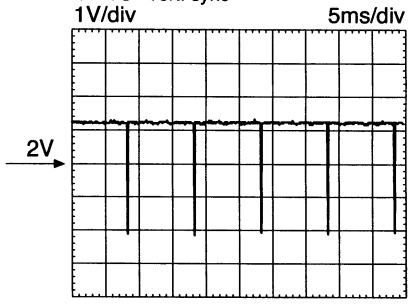

TP19 DDP Xtal
500mV/div 50ns/div

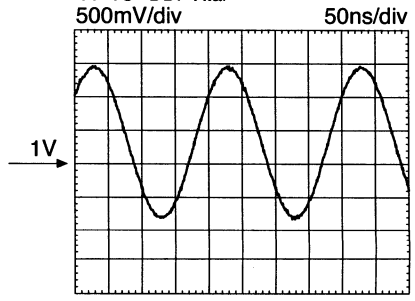

TP20a Sense
1V/div 100μs/div

TP7 Pros. Xtal
200V/div 50ns/div
600mV

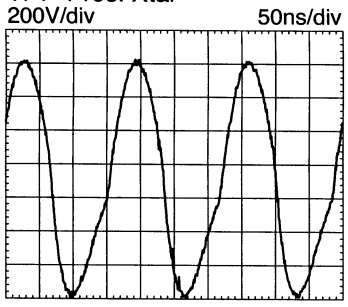

TP8a SDA 3
1V/div 50µs/div
TP8b SCL 3
1V/div 50µs/div
2V
2V

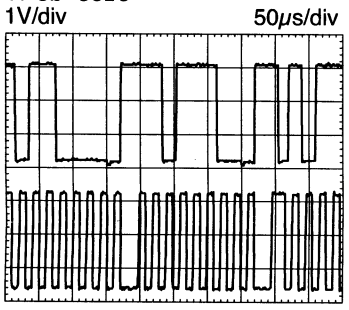

TP9a SDA 5
2V/div 50µs/div
TP9b SCL 5
2V/div 50µs/div
4V
4V

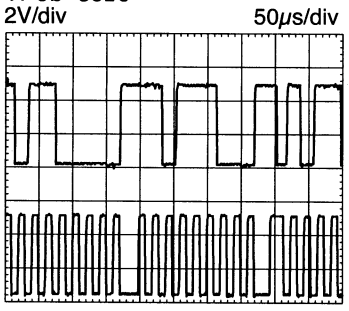

TP10 V-sync (pros)
1V/div 5ms/div
2V

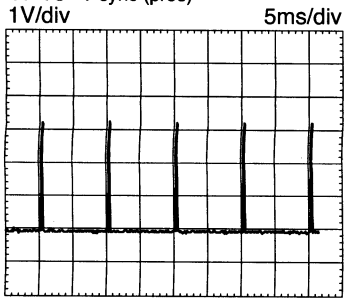

TP11 H-sync (pros)
1V/div 10µs/div
2V

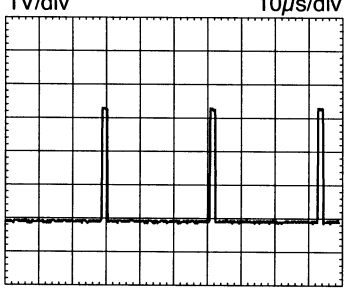

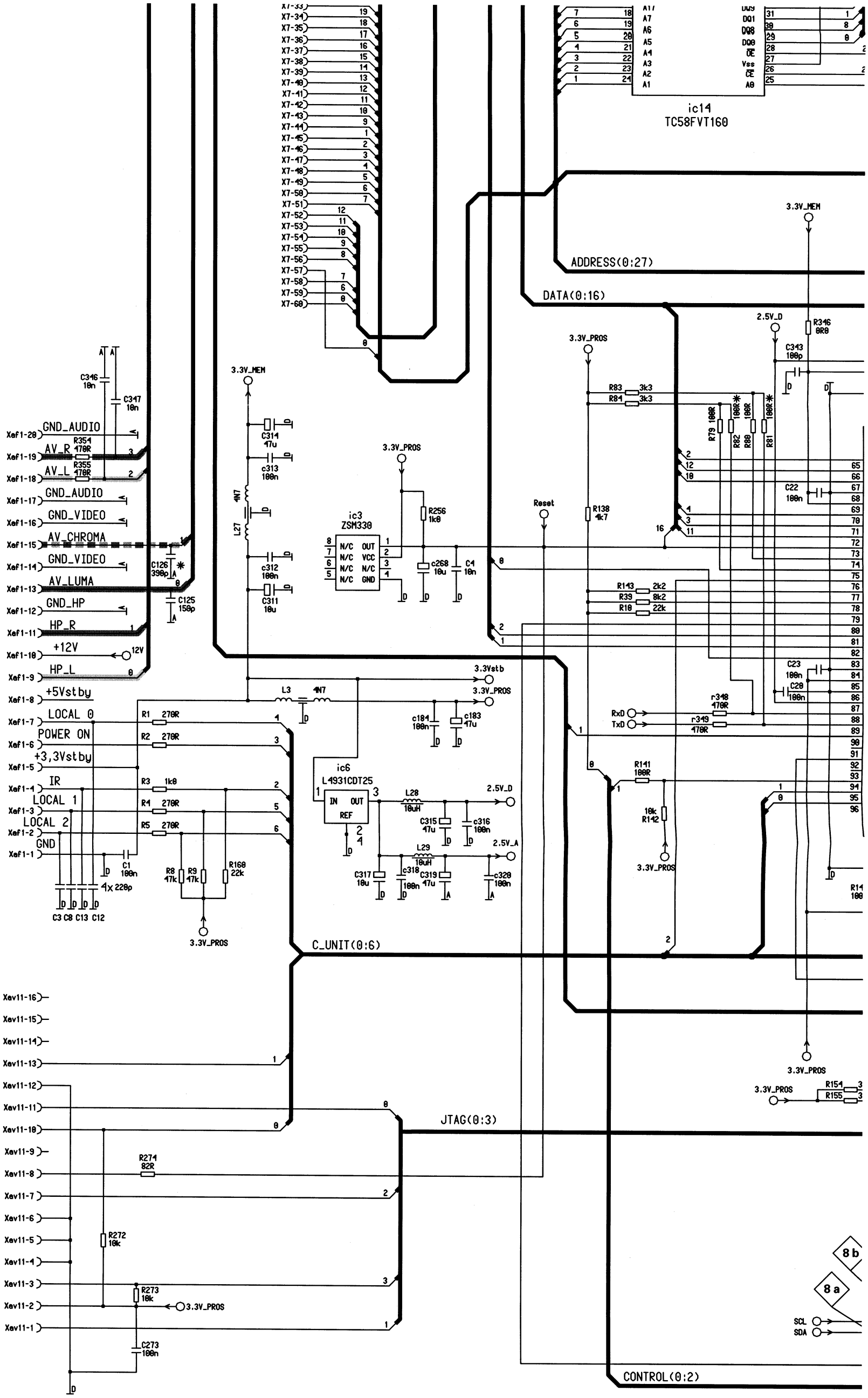

VERSION 7

SIGNAL MODULE
AV16*
MC2B SERIES

66117323

ic15
HYB39S16160BT

ic16
HYB39S64160AT

C27 100n
R14 22R
R255 330R
R254 220R
3.3V_MEM

ic5
SDA6000

C28 100n
C31 100n
C36 100n
C48 100n
C50 100n
C49 100n
C45 100n
C5 100n
C29 100n
C32 100n
C34 100n
C35 100n
C33 100n
C348 47n
C339 47n
C338 47n
R13 75R
R13 10k
R349 10k
R341 10k
R342 10k
R344 100k **
only AV162 AV165 **

Bootstrap
R235 4k7
R231 22k
T20 BC847B
3.3V_PROS
R163 10k
R164 10k
R12 10k
R356 470R
R357 470R
R358 470R
R359 470R
R78 3k3
R85 10k
C47 1n0

TRIG_IN
TRIG_OUT
X8
R149 100R
Z7 6.000MHz
C38 33p
C39 33p
2.5V_A
2H
2V
R158 220R
R246 100R
R247 100R
ic19 24C32N
t53 2N7002
R72 0R0
ic22 LM1117-1.8
C325 10u
c41 330n
C326 10u
1V8
3V3
SCL5 SDA5
R161 100R
R162 100R
R276 330R
r384 4k7
9b
10
11
7

r353 0R0 *
r352 0R0
r351 0R0
r350 0R0 *

T26 BC847B
T24 BC847B
T25 BC847B
T27 BC847B
T23 BC847B
R269 33k
Lev15 10uH
C272 47p
R270 18k
R268 300R
R298 1k0
R214 330R
R266 330R
R271 33k

C342 10n
R347 0R0
C81 100u
C82 100n
12V
5V
12V
SUB.ON/OFF

PICTURE_ON/16:9_ID
AUDIOMUTE/SUB.ID
SVGA-CONTROL
LINE-OUT_ID
TILT
VGA_HOR.SHIFT

ic17
DDP3315C

TEXT(0:3)
LUMA(0:8)
SCL
SDA
12V
PTP_CVBS
TUNER_CVBS
AM
STF
GND_AUDIO
GND_AUDIO
SUBWOOFER_OUT
AUDIO_L_OUT
AUDIO_R_OUT

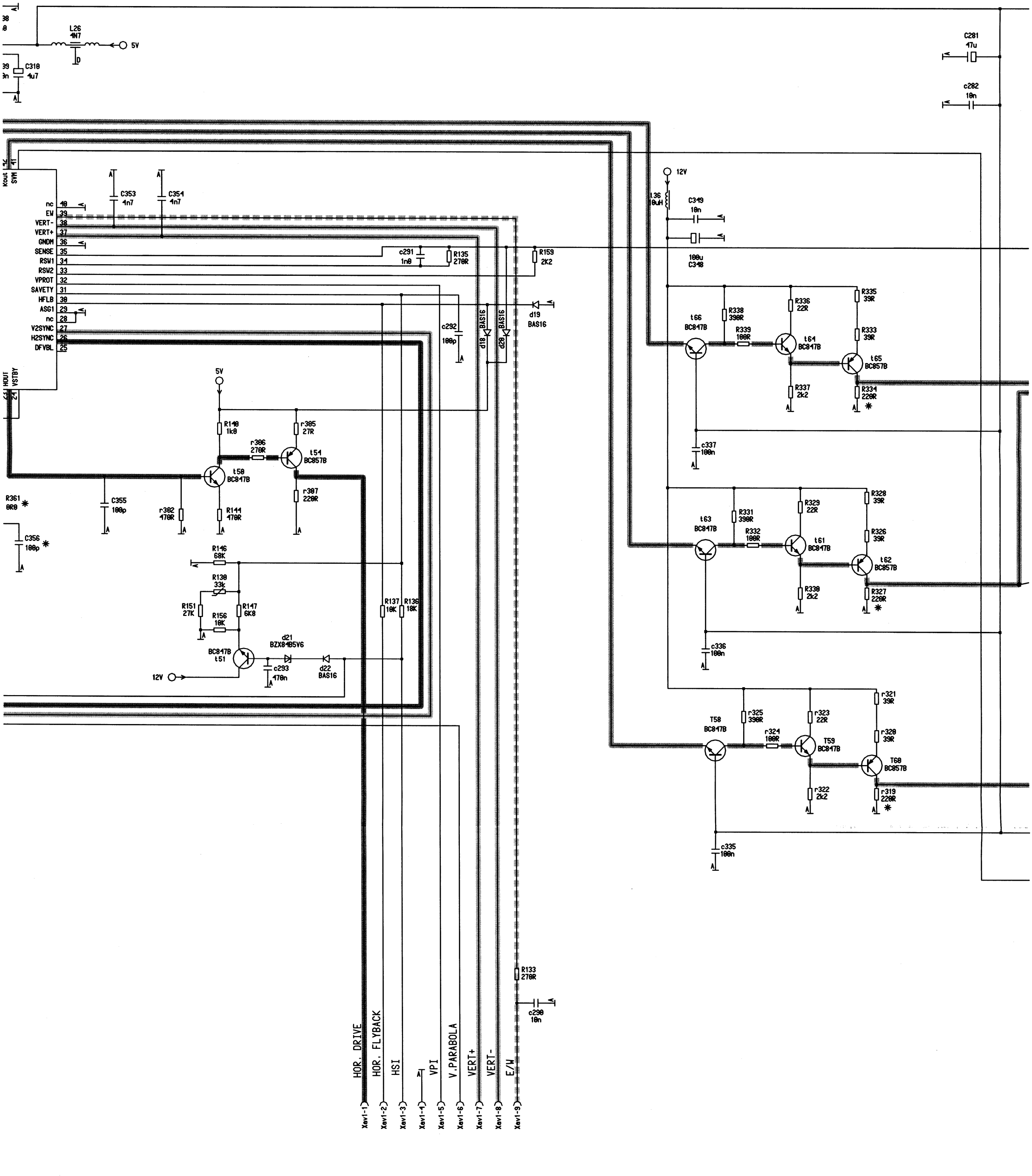
L26
4N7
5V
C318
4u7
C281
47u
c282
10n
Kout
SVM
nc
EW
VERT-
VERT+
GNDH
SENSE
RSW1
RSW2
VPROT
SAVETY
HFLB
ASG1
nc
V2SYNC
H2SYNC
DFVBL
HOUT
VSTBY
C353
4n7
C354
4n7
c291
1n0
R135
270R
R159
2K2
c292
100p
d18
BAS16
d19
BAS16
12V
L36
10uH
C349
10n
100u
C348
t66
BC847B
R338
390R
R339
100R
t64
BC847B
R336
22R
R335
39R
R333
39R
t65
BC857B
R337
2k2
R334
220R
c337
100n
5V
R148
1k0
r385
27R
r386
270R
t54
BC857B
t58
BC847B
r387
220R
R361
6R8
C355
100p
r382
470R
R144
470R
C356
100p
R146
68K
R138
33k
R151
27K
R147
6K8
R156
10K
R137
10K
R136
18K
d21
BZX84B5V6
BC847B
t51
c293
470n
d22
BAS16
12V
t63
BC847B
R331
390R
R332
100R
t61
BC847B
R329
22R
R328
39R
R326
39R
t62
BC857B
R339
2k2
R327
220R
c336
100n
T58
BC847B
r325
390R
r324
100R
r323
22R
r321
39R
r320
39R
T59
BC847B
T60
BC857B
r322
2k2
r319
220R
c335
100n
R133
270R
c290
10n
HOR. DRIVE
HOR. FLYBACK
HSI
VPI
V.PARABOLA
VERT+
VERT-
E/W
Xav1-1
Xav1-2
Xav1-3
Xav1-4
Xav1-5
Xav1-6
Xav1-7
Xav1-8
Xav1-9

TP20b G
2V/div
100µs/div

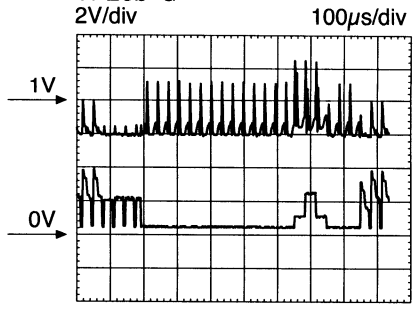

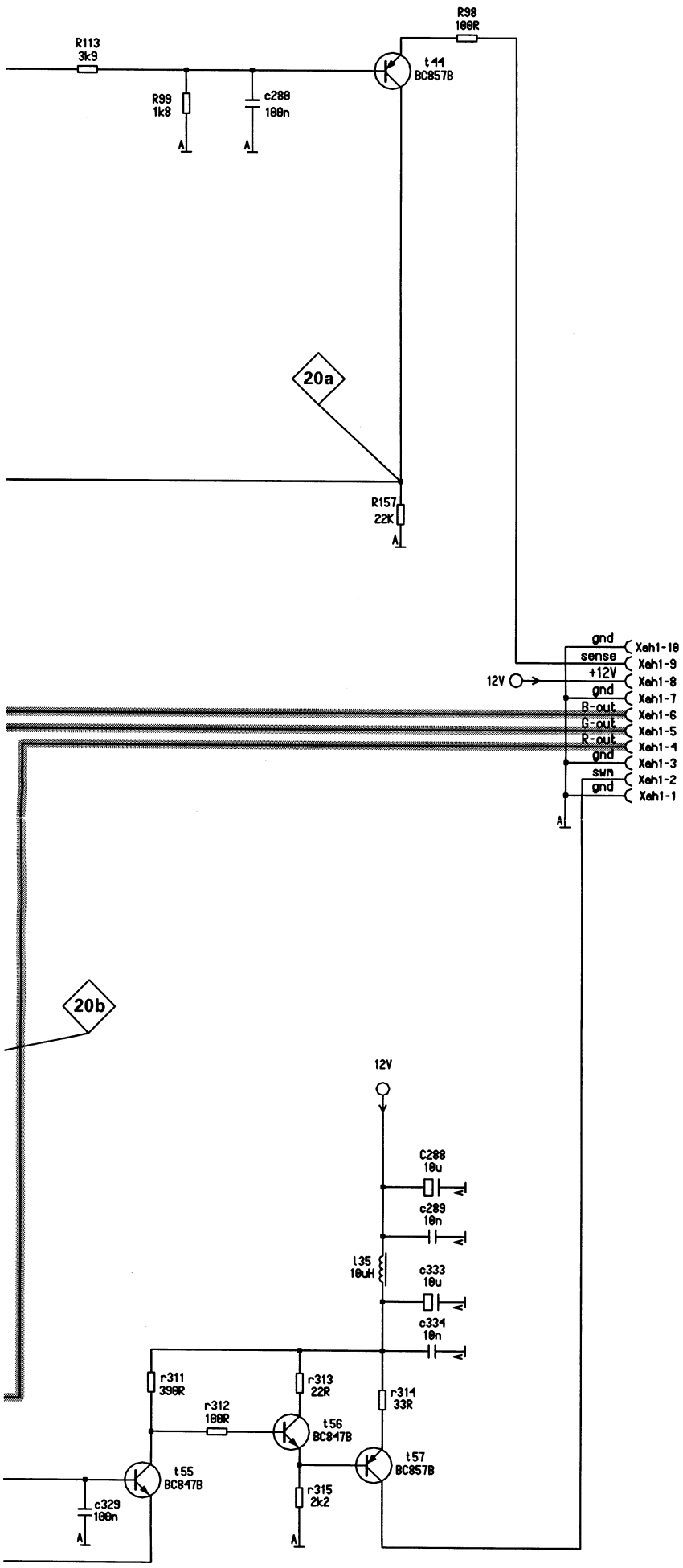

* not used
** version component
⚠ safety component, must be replaced only with original parts.

Video signal (CVBS or Y)
Chroma signal
Sound IF signal
Audio signal (L)
Audio signal (R)
Subwoofer signal
RGB or UV signal
Horizontal deflection signal
Vertical deflection signal
E-W raster correction signal